BuWizz

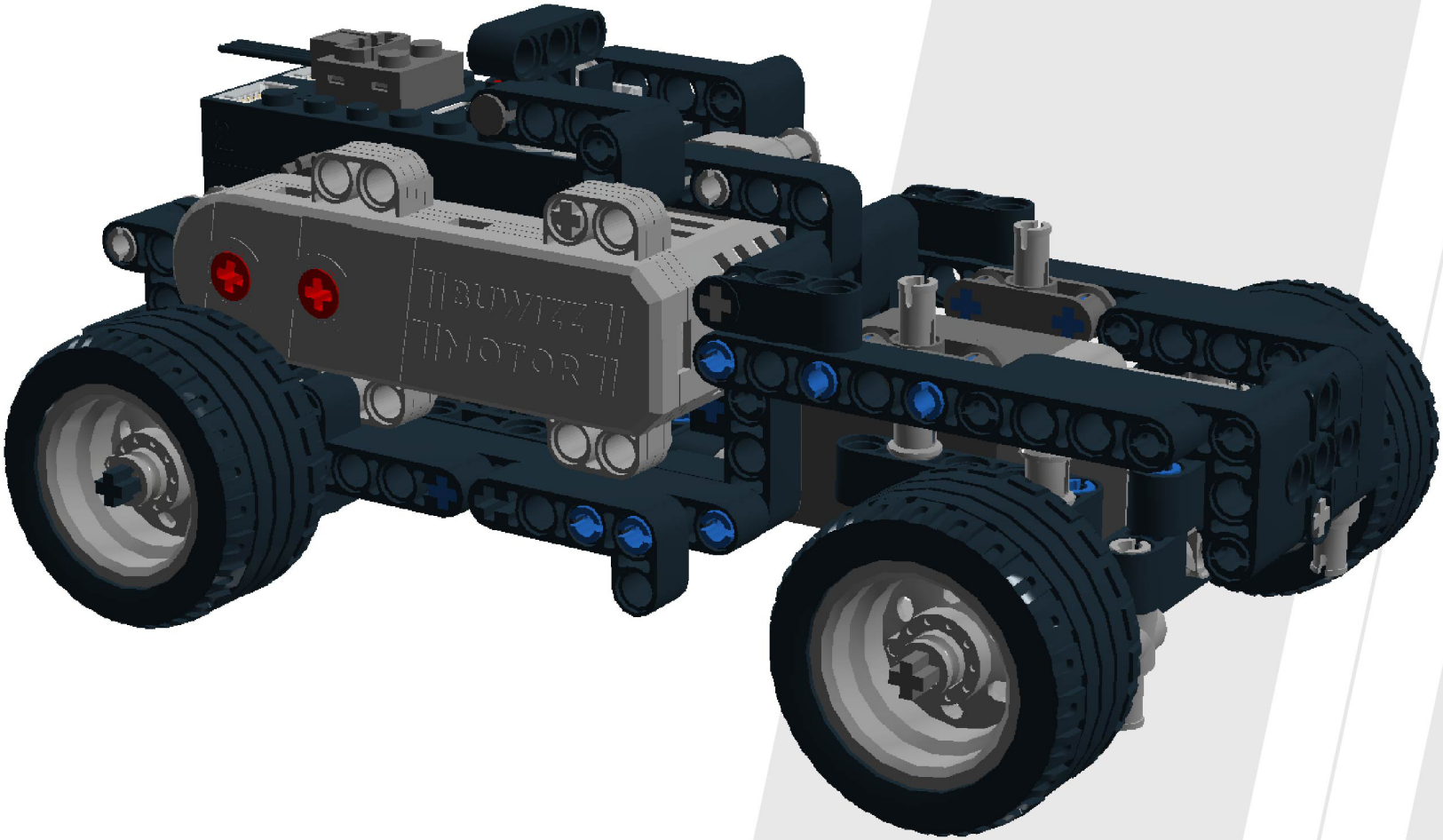

BUILDING INSTUCTIONS

BuWizz Modular Car - Chassis

EXPERIENCE POWER WITH:

BuWizz 3.0 Pro

MORE INFO

BuWizz Motor

MORE INFO

1

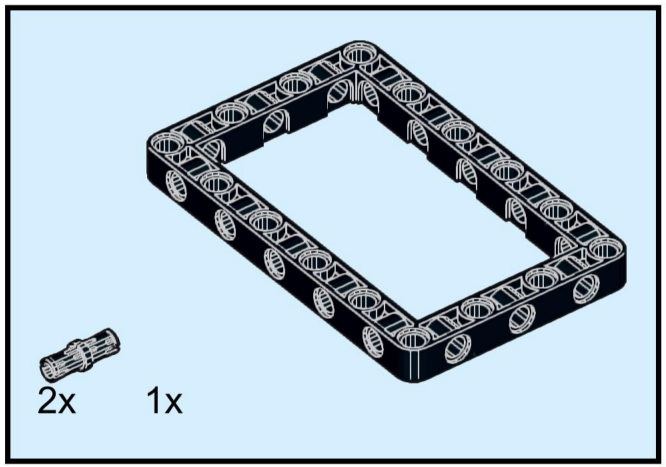

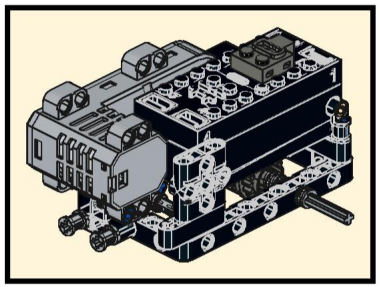

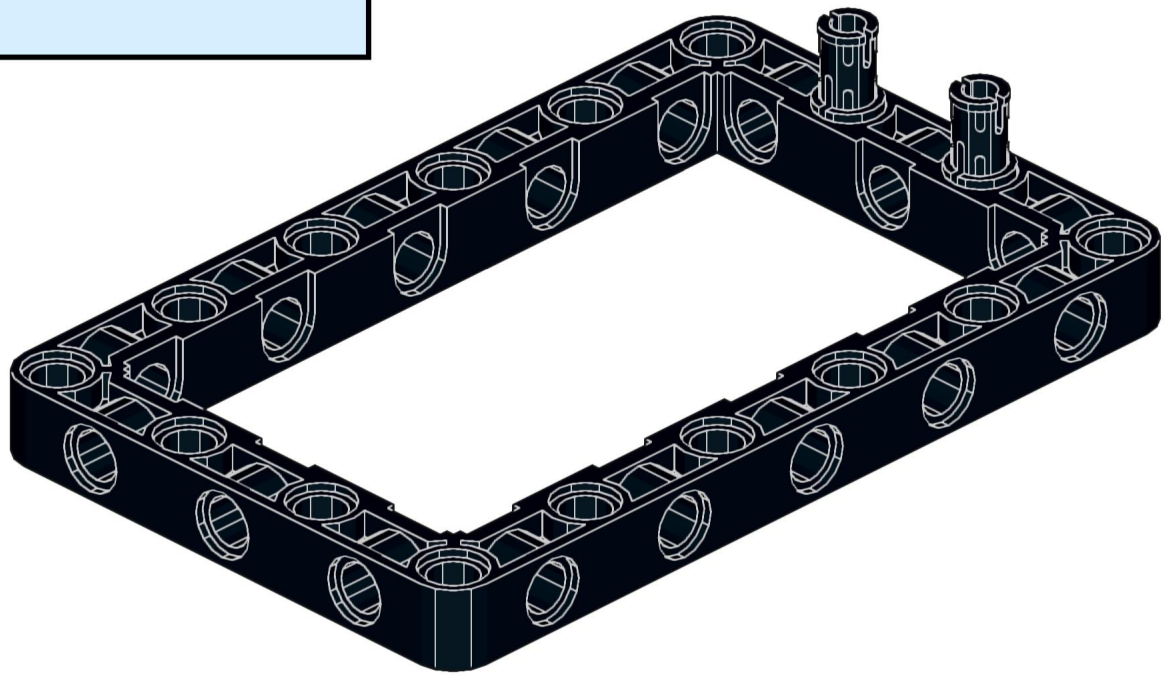

2

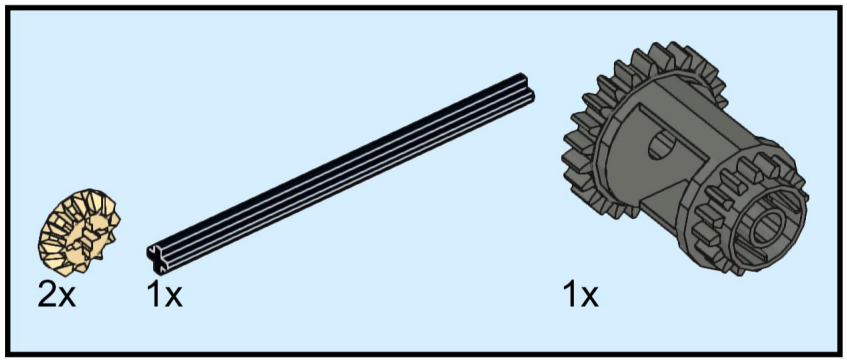

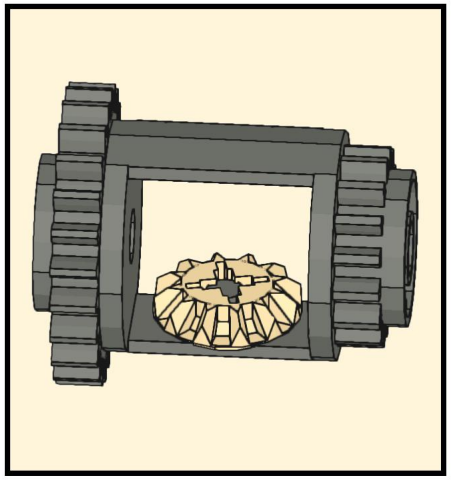

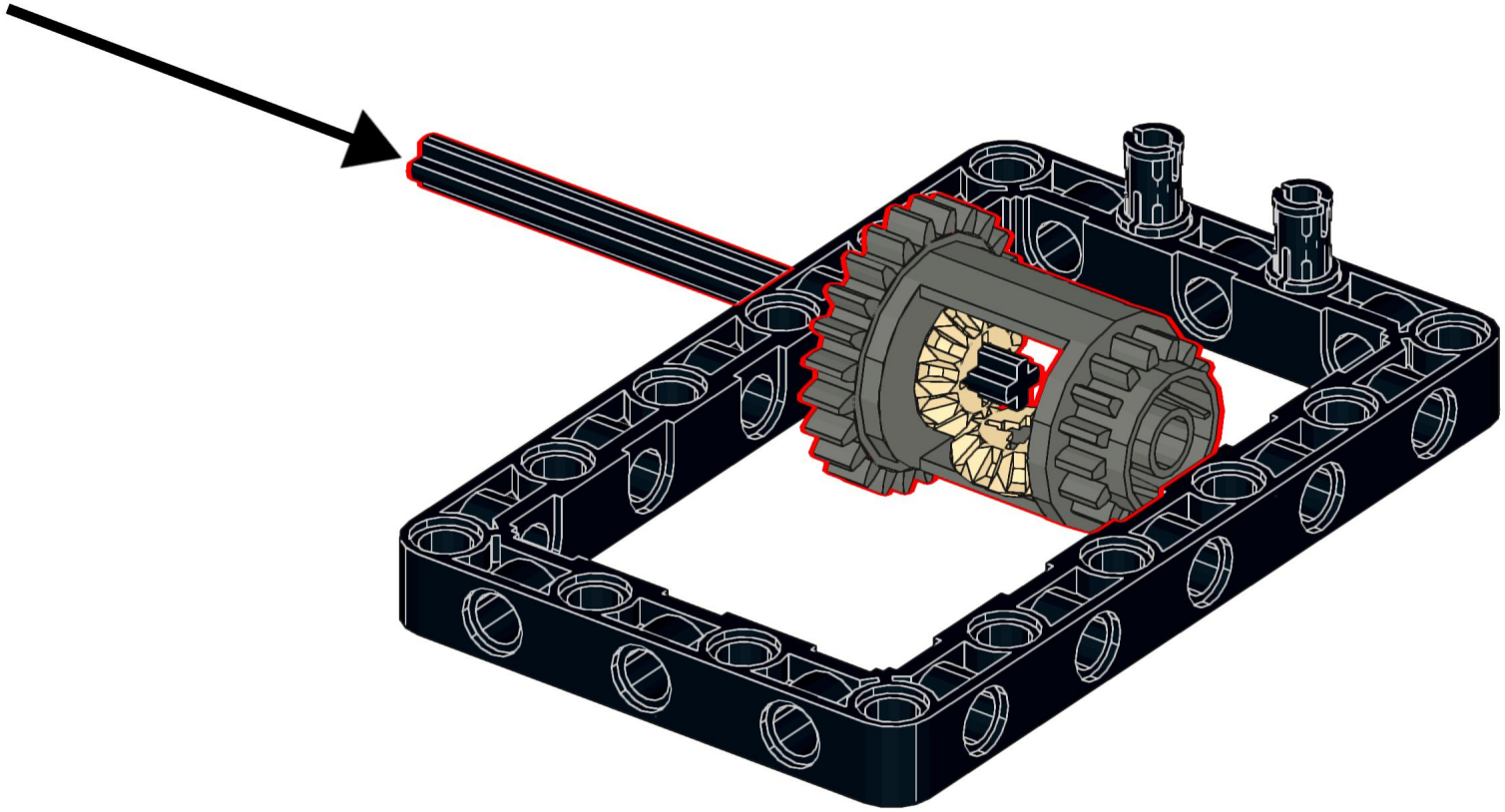

1:1

3

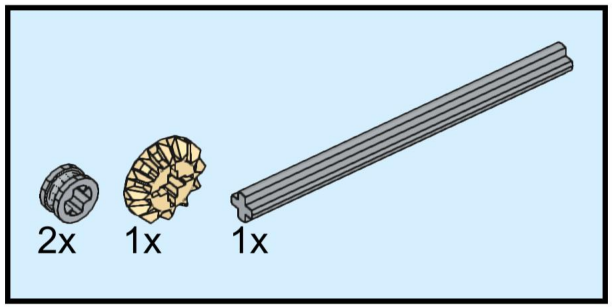

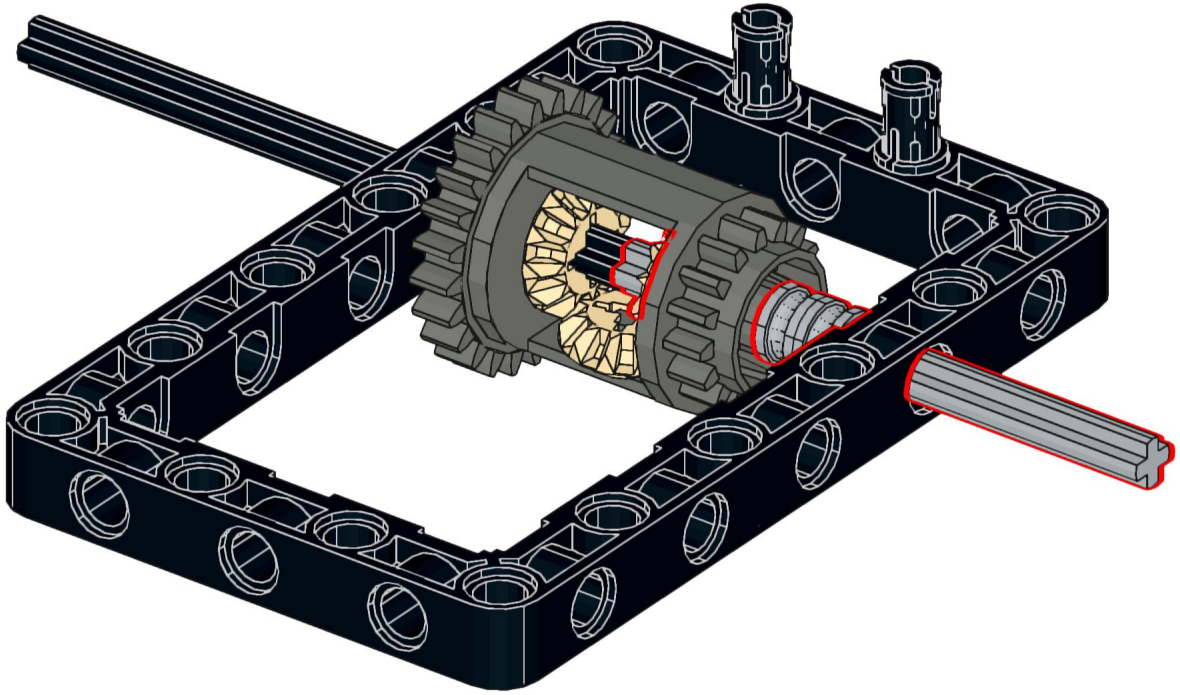

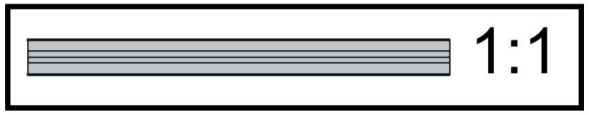

4

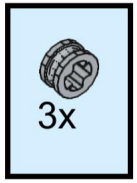

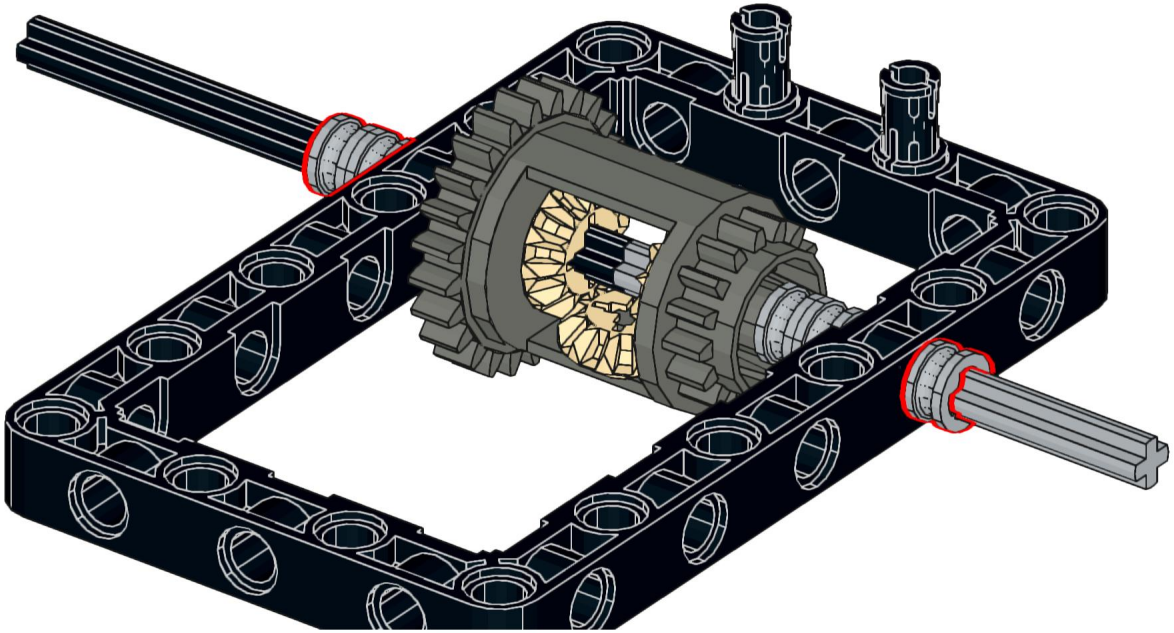

5

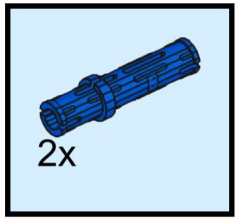

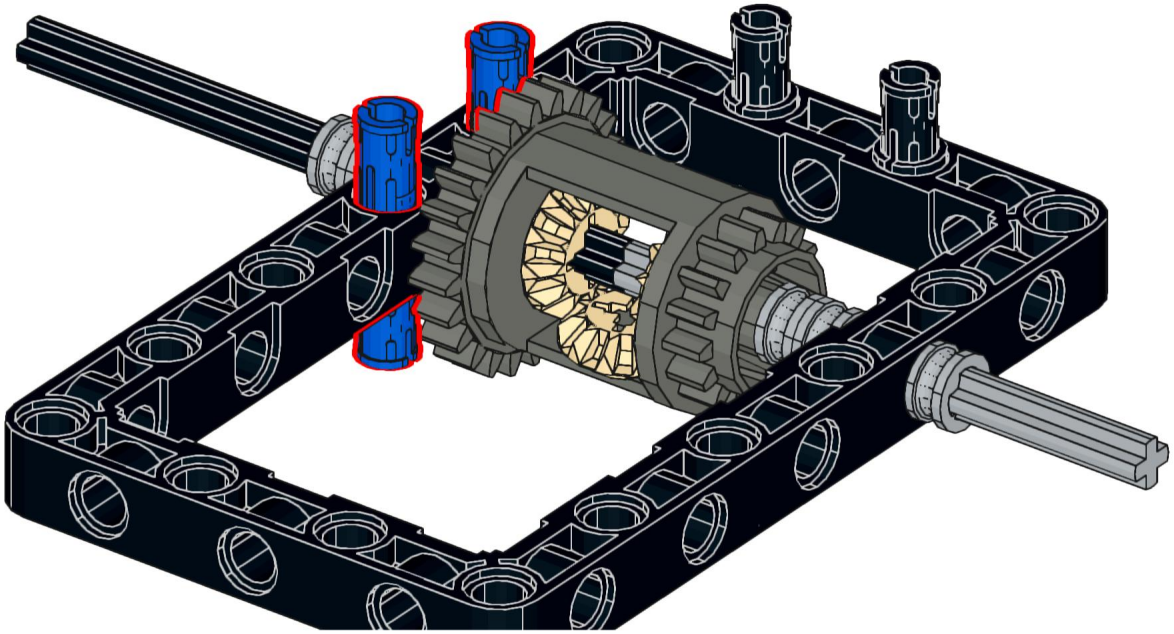

6

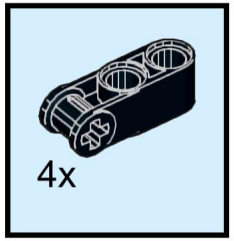

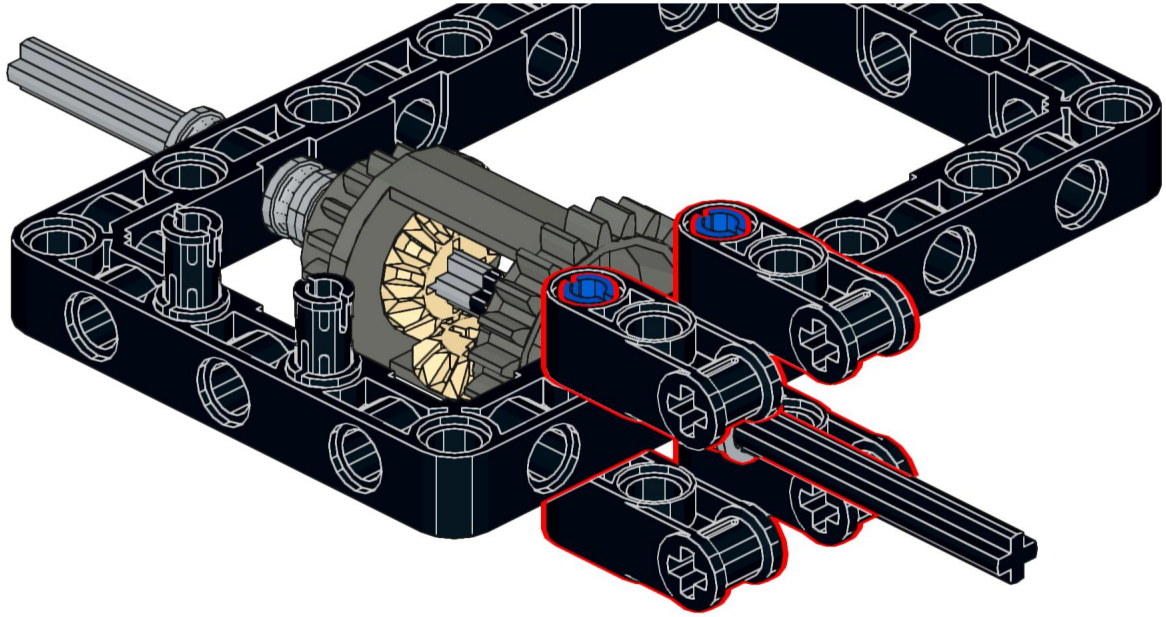

7

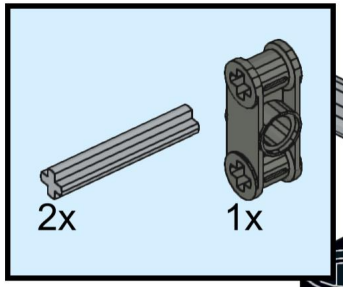

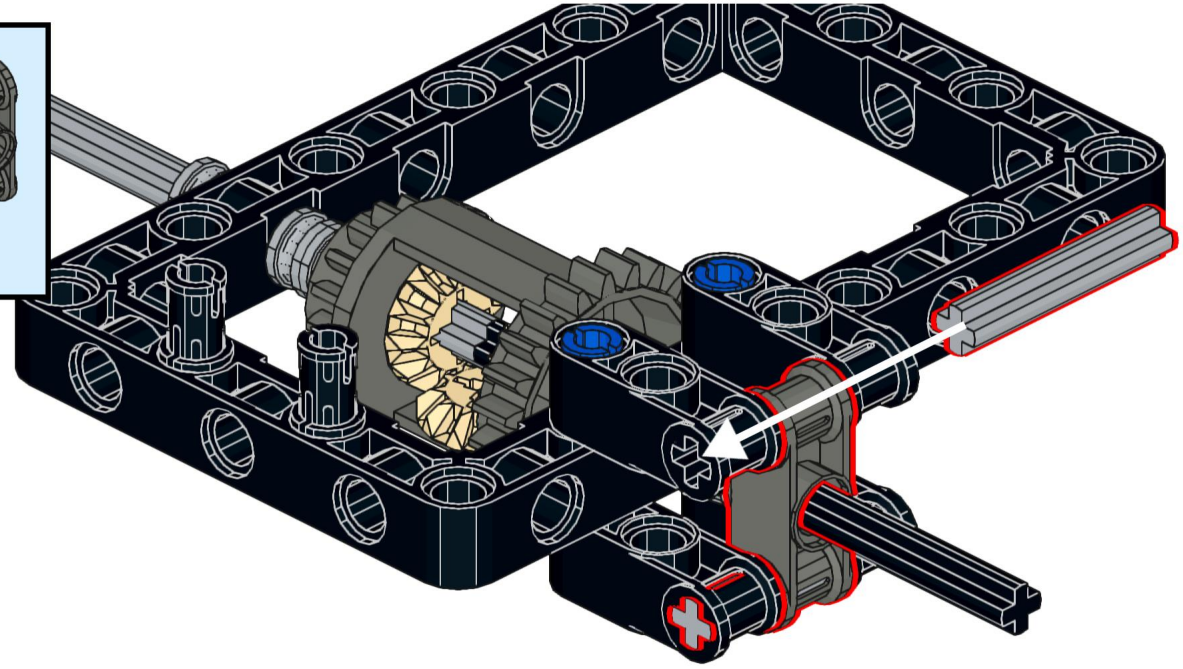

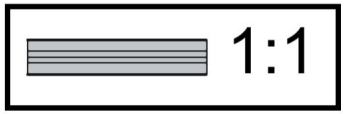

8

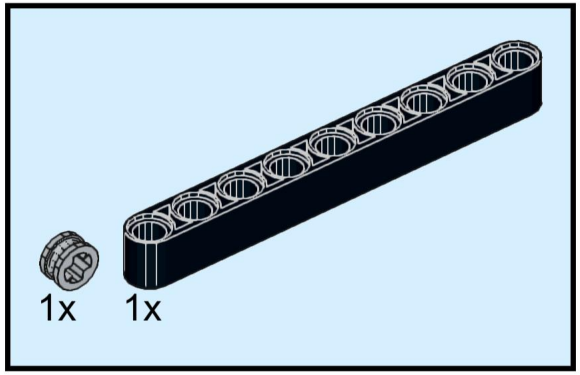

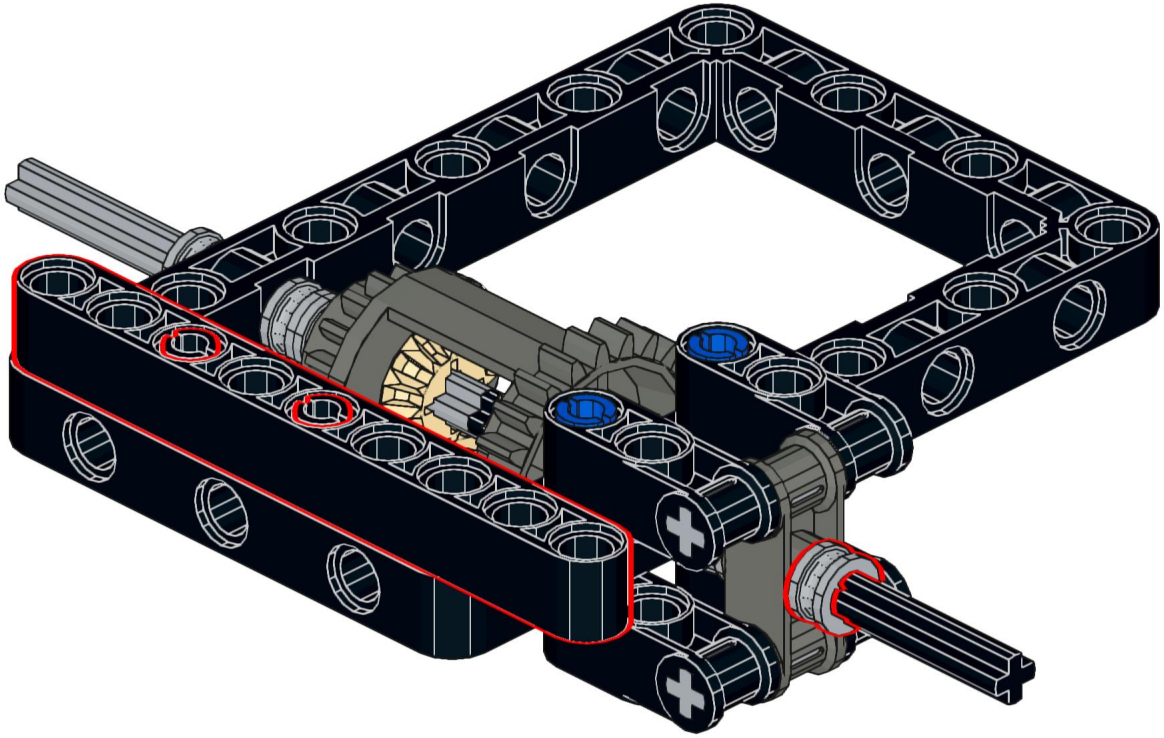

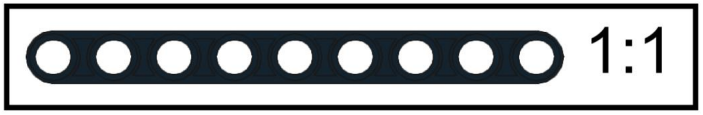

9

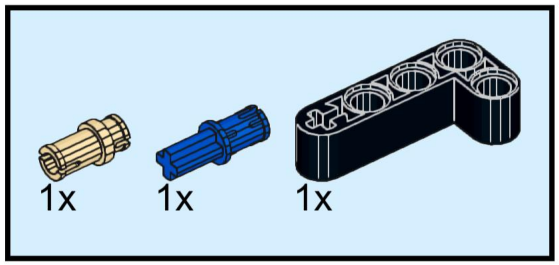

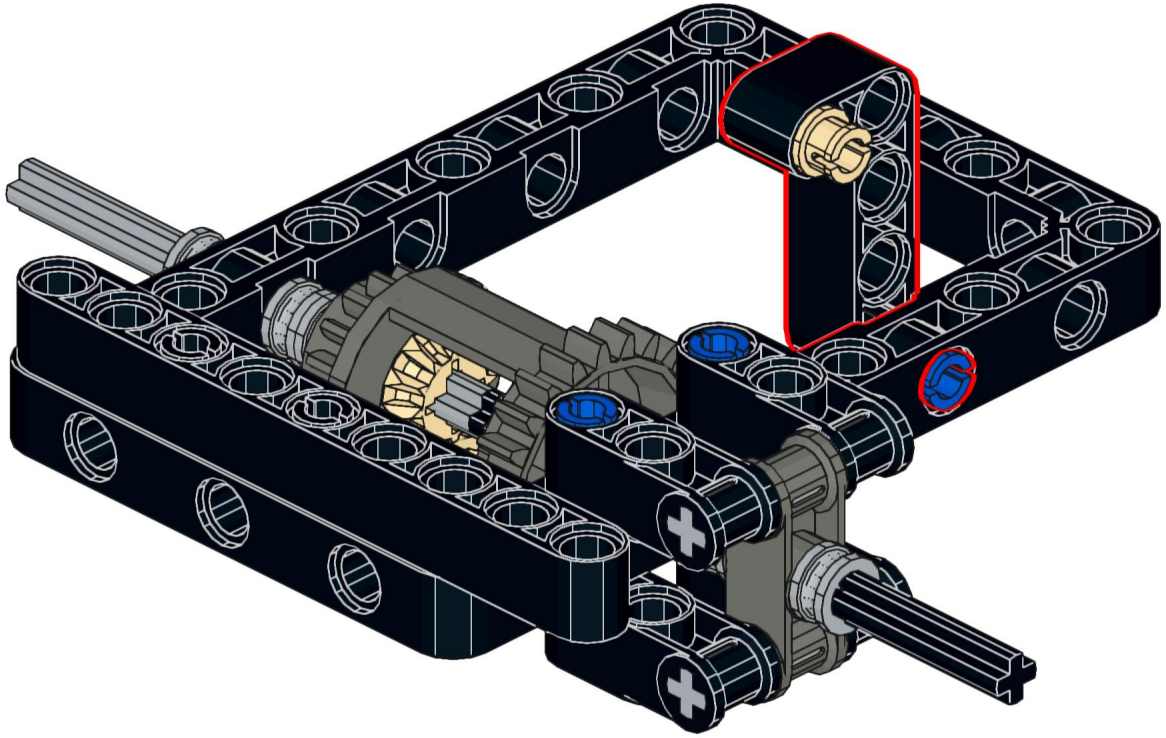

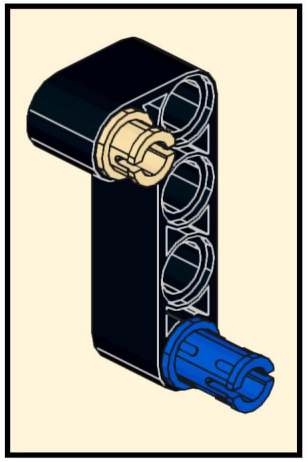

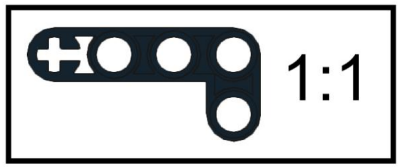

10

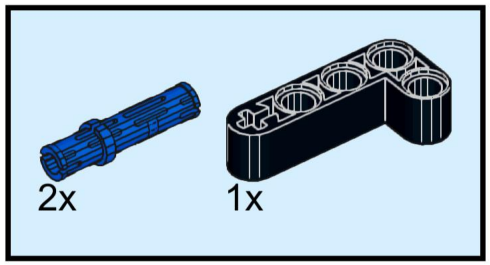

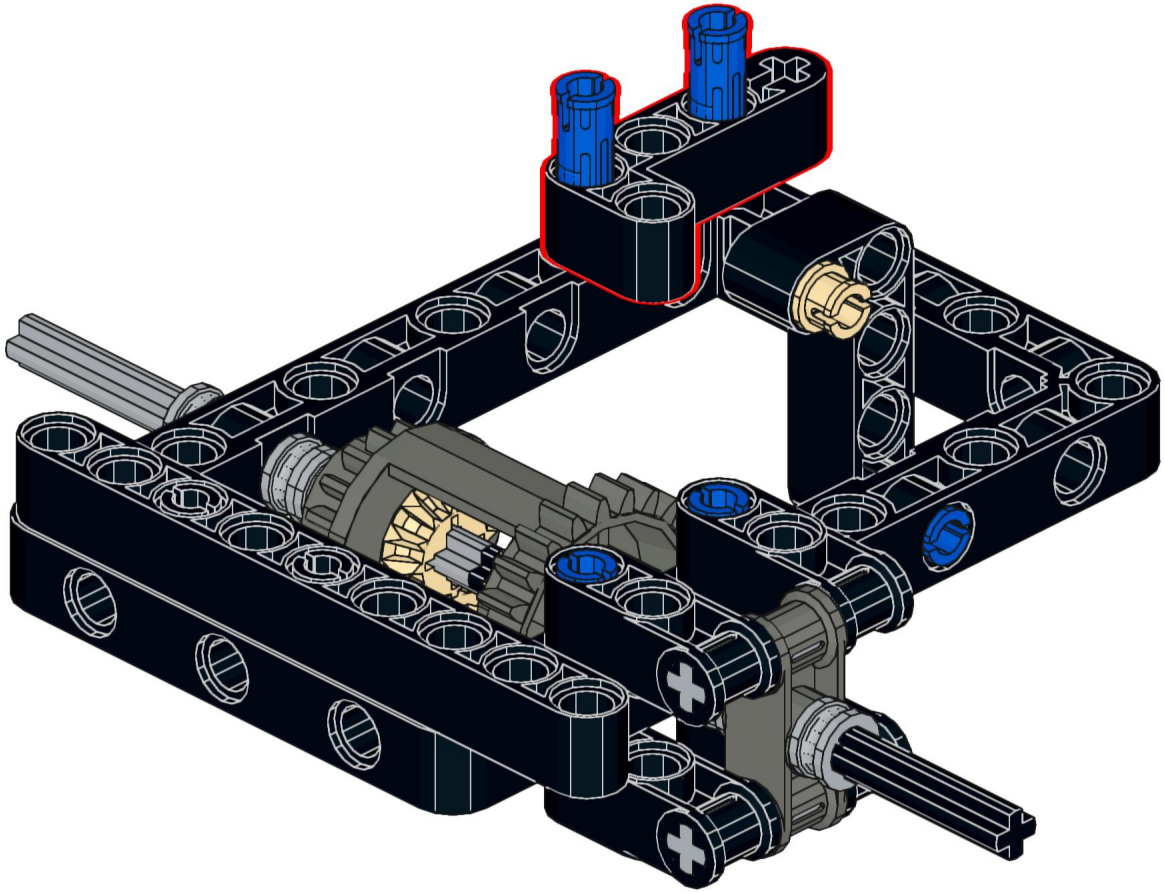

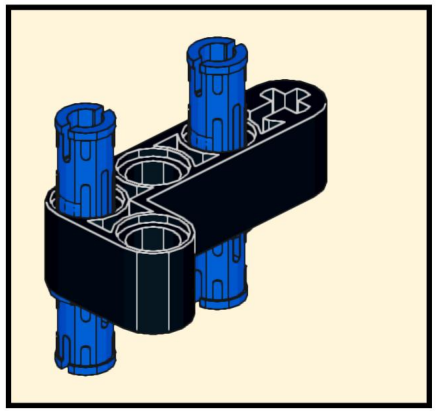

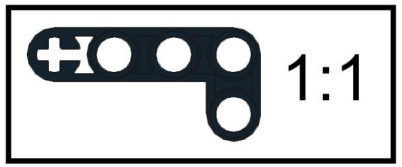

11

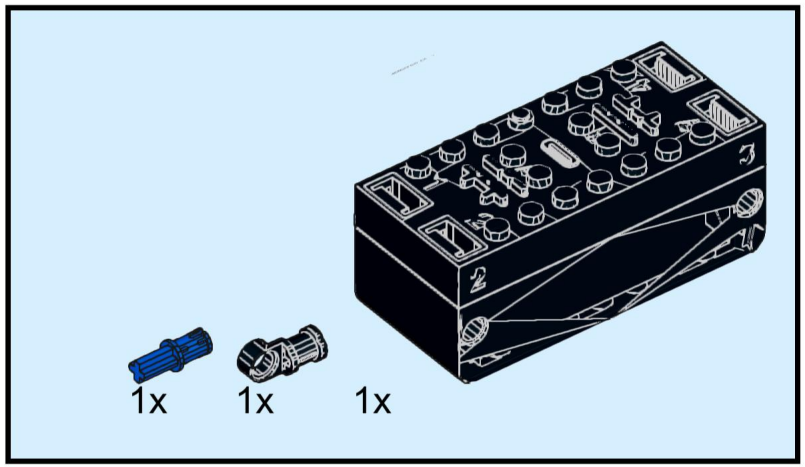

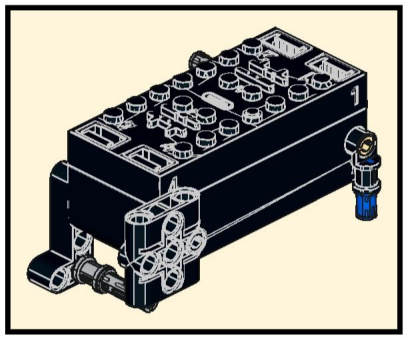

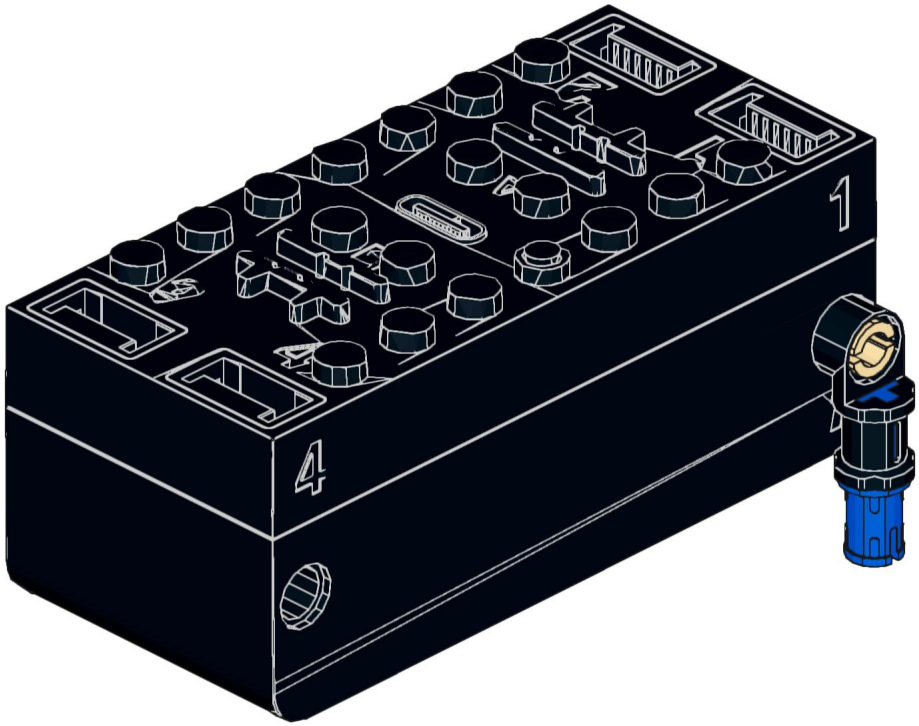

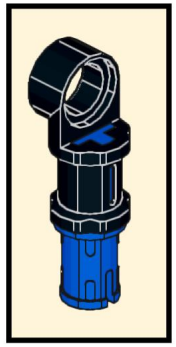

12

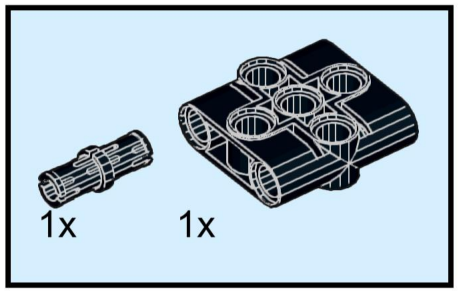

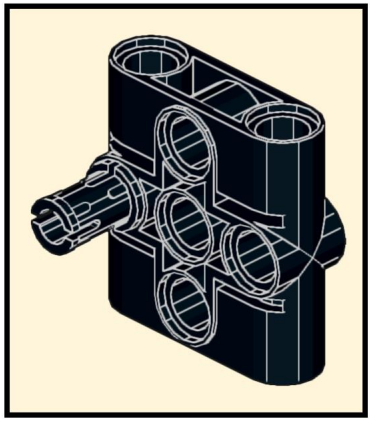

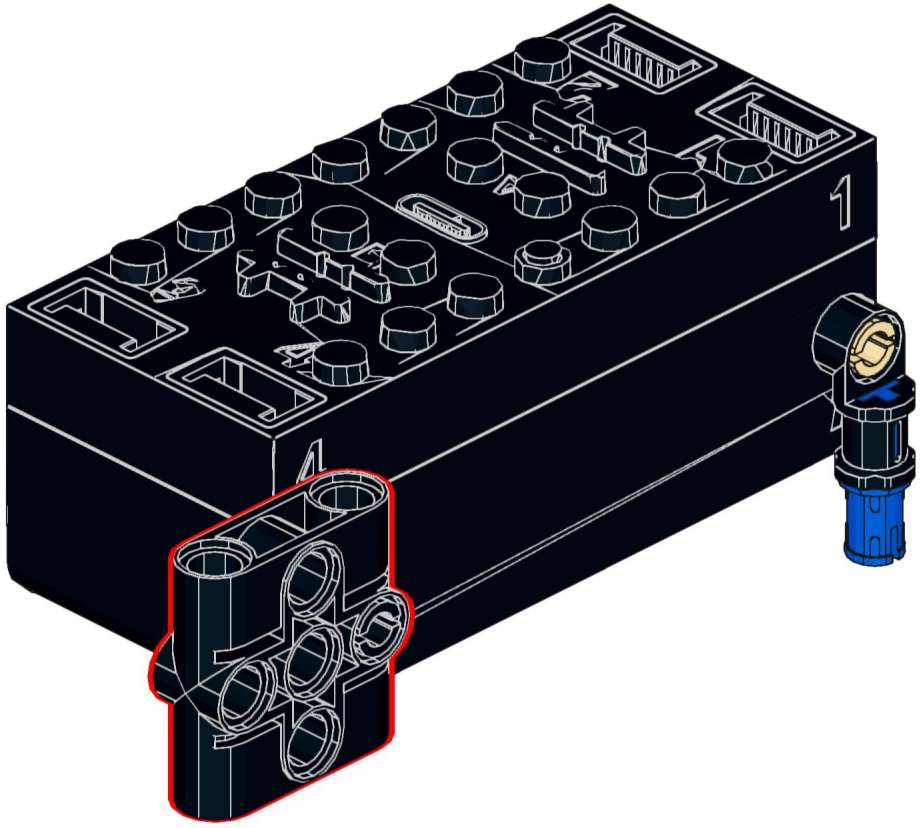

13

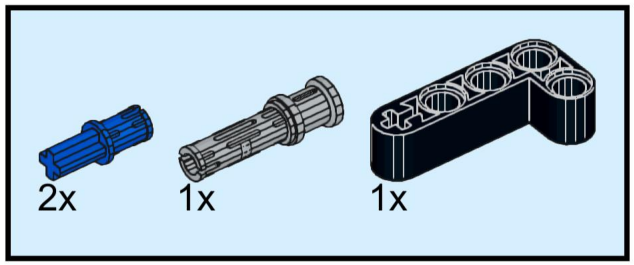

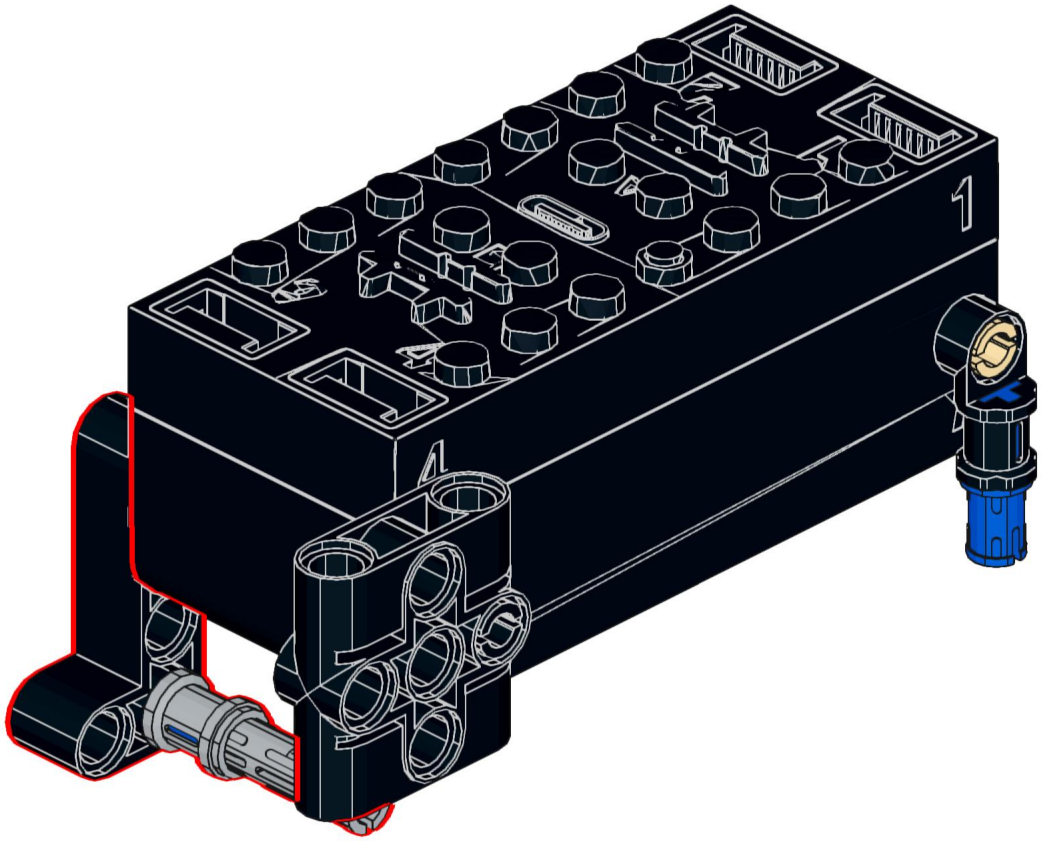

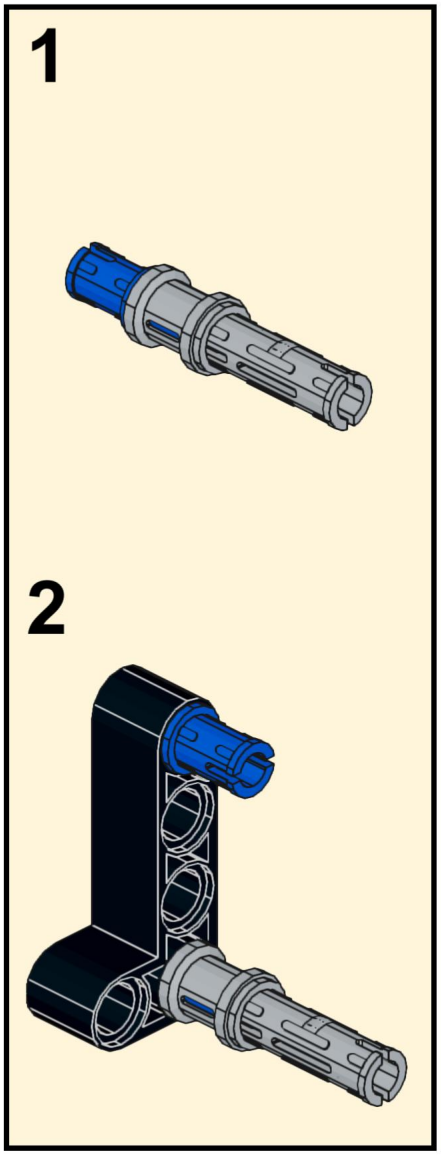

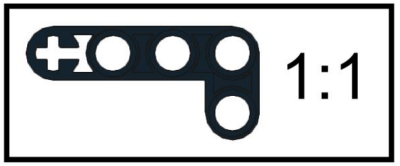

14

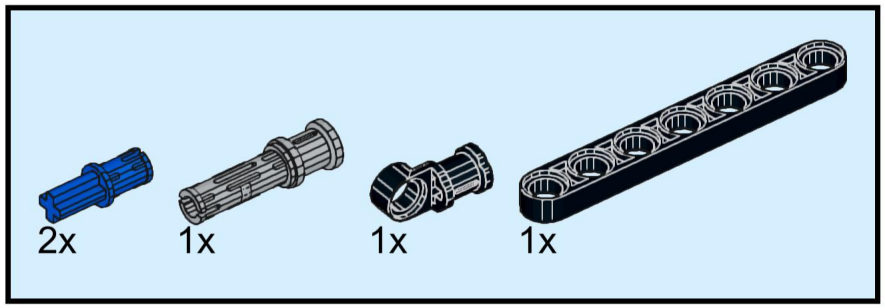

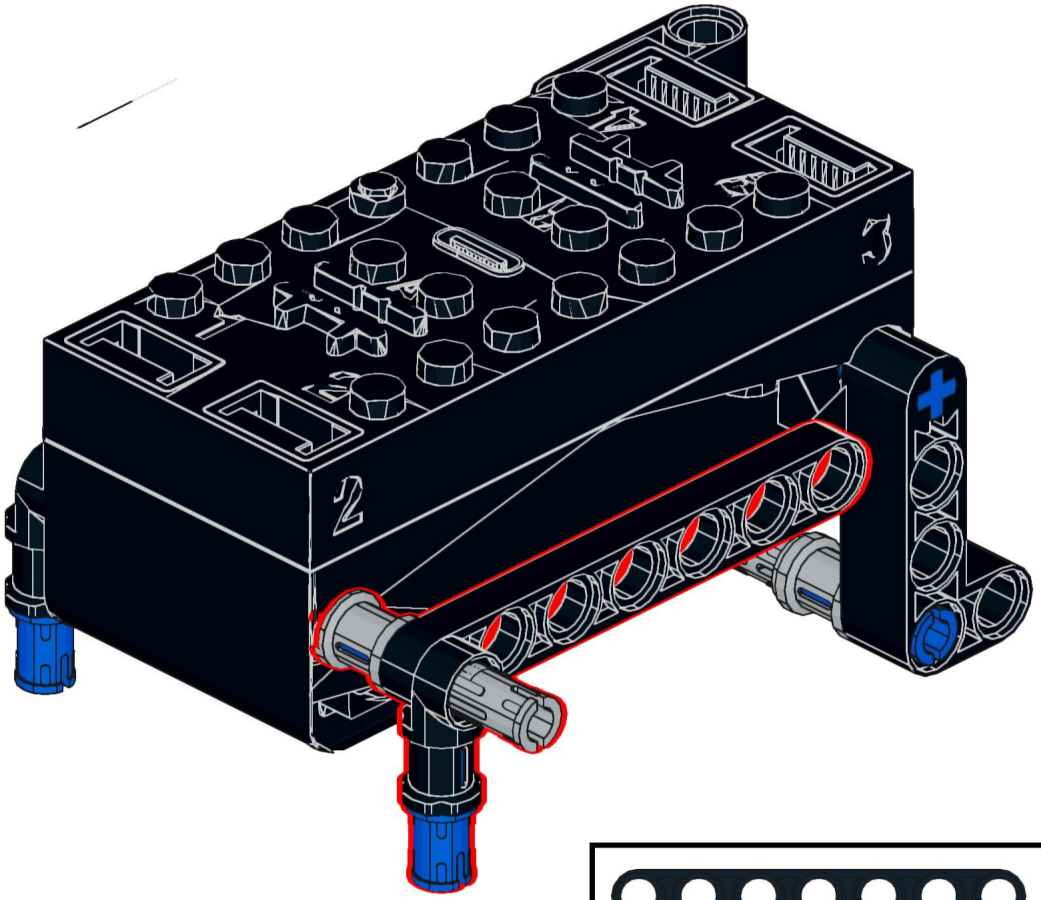

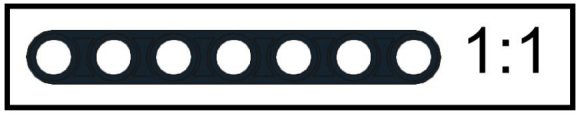

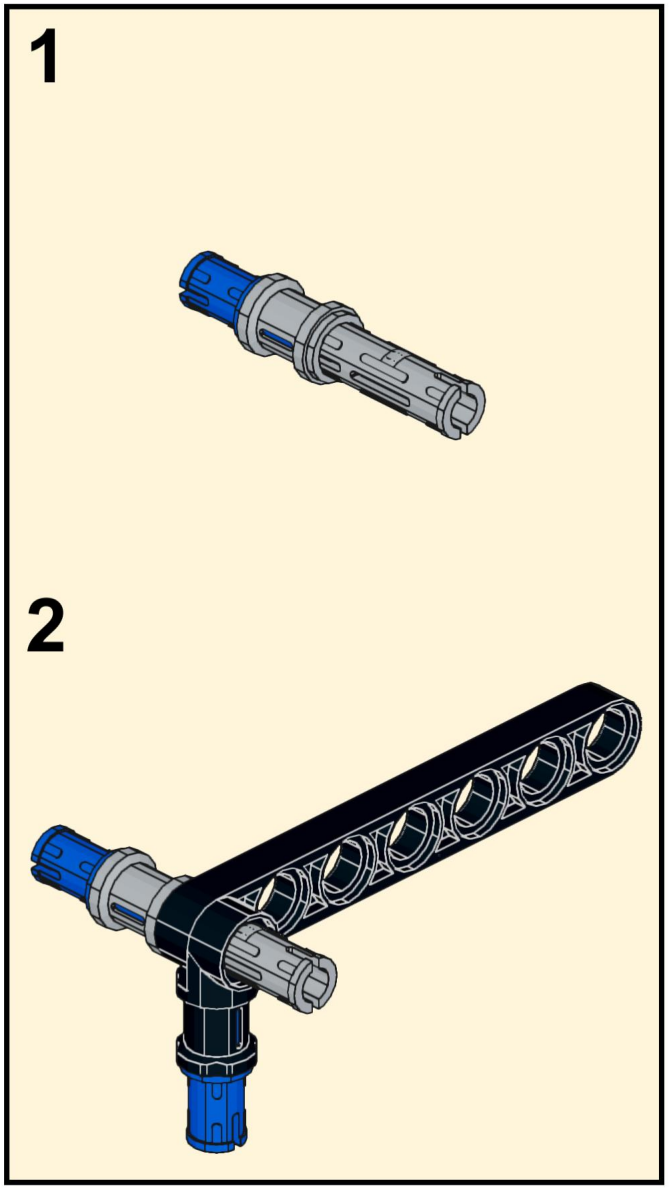

15

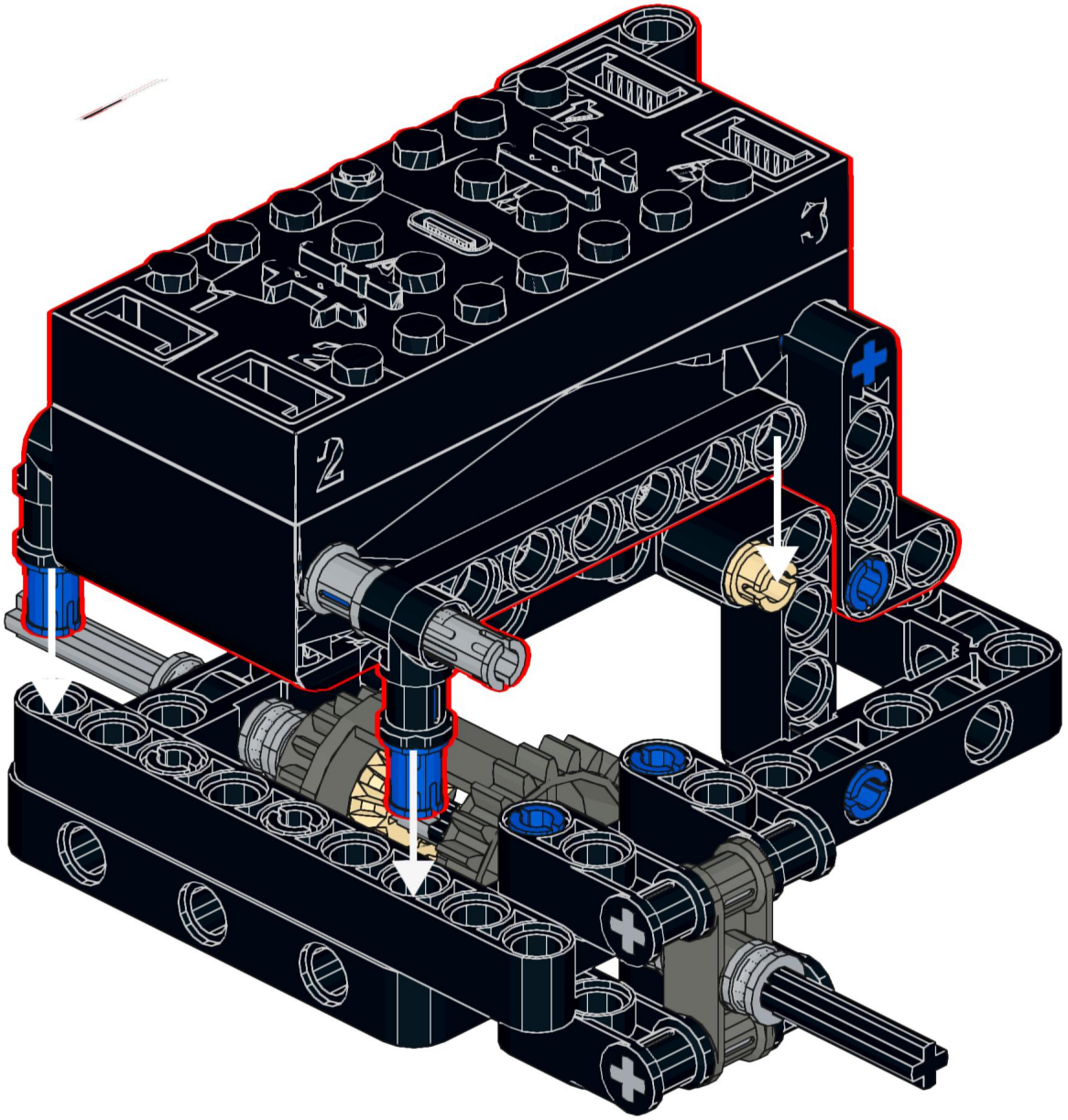

16

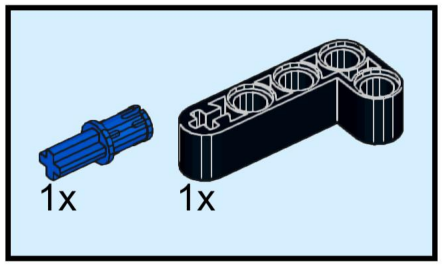

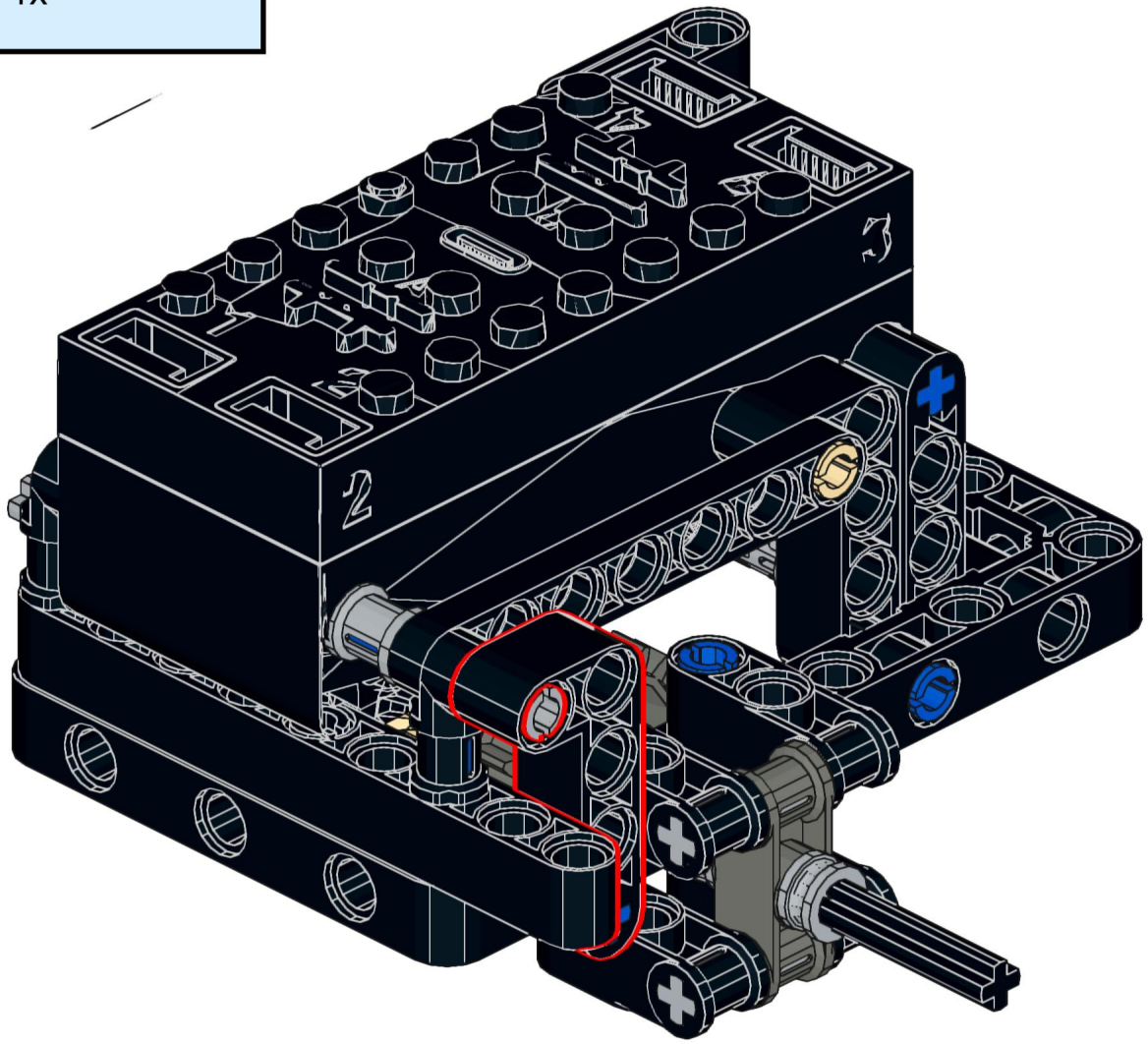

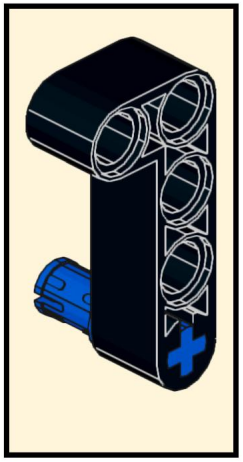

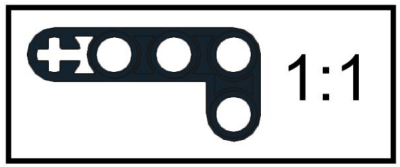

17

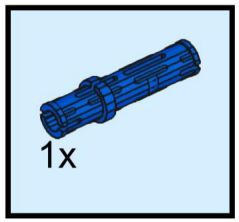

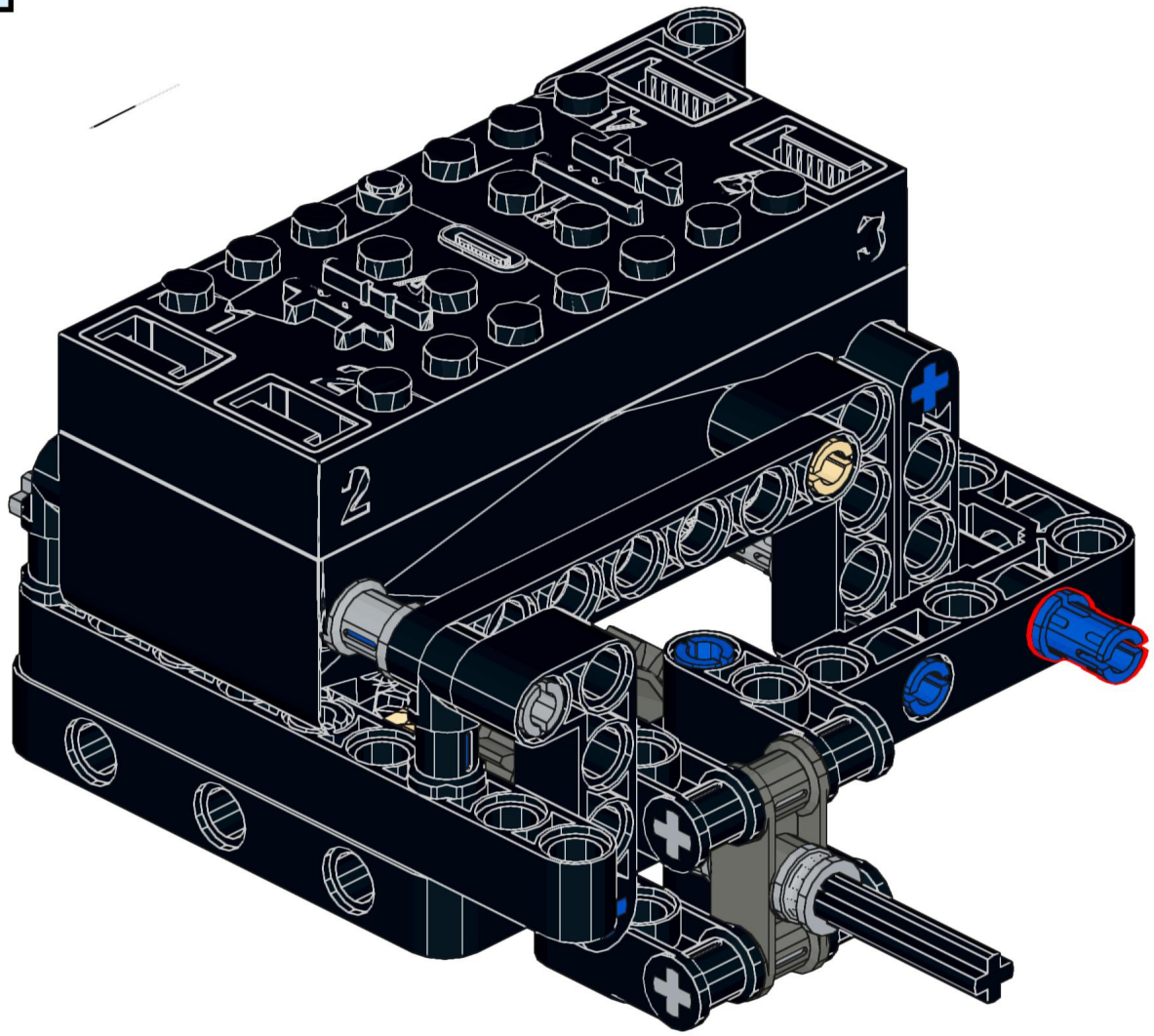

18

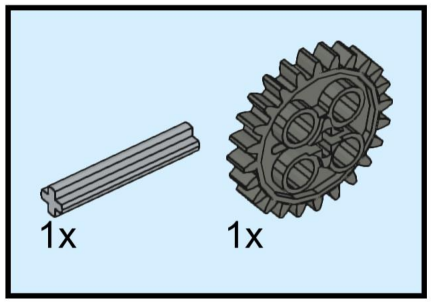

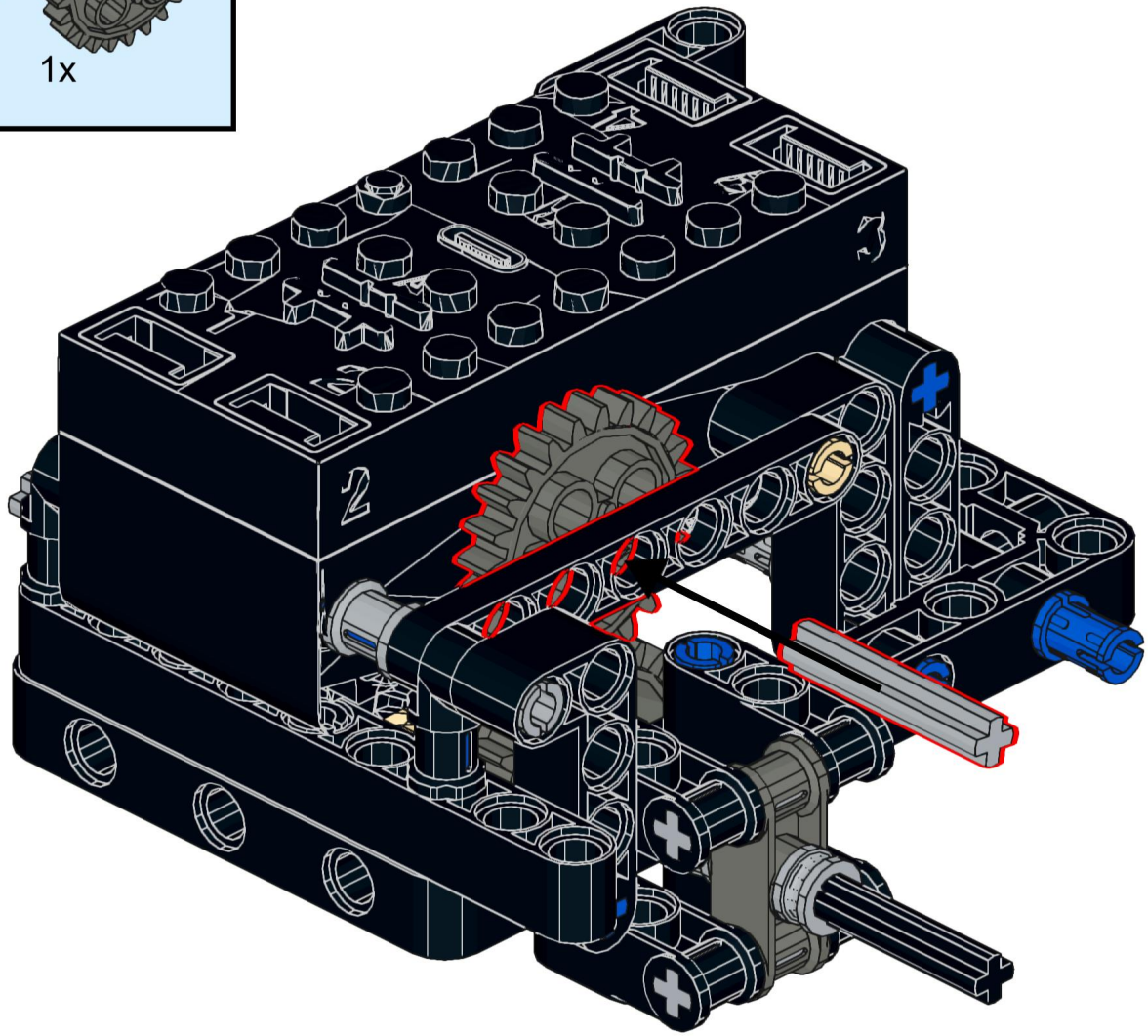

1:1

19

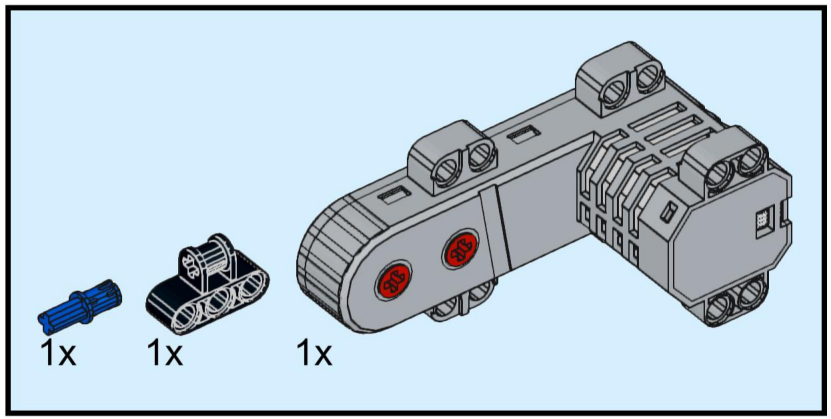

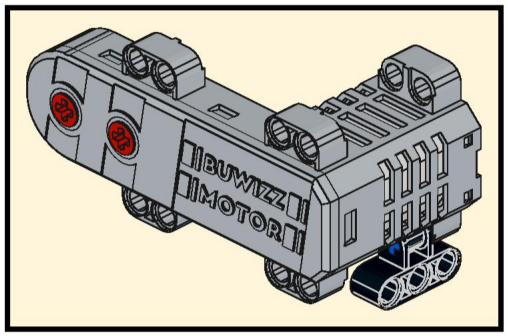

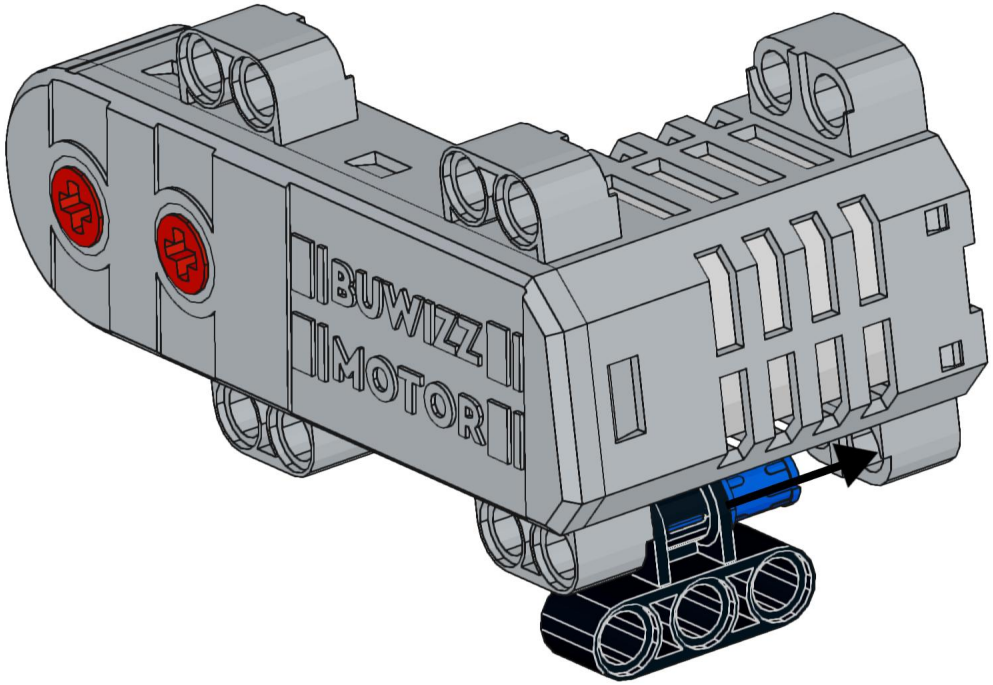

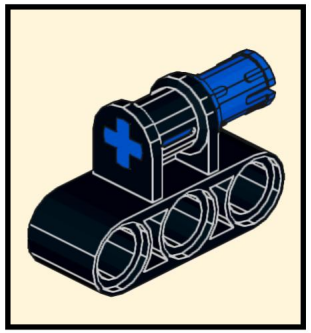

20

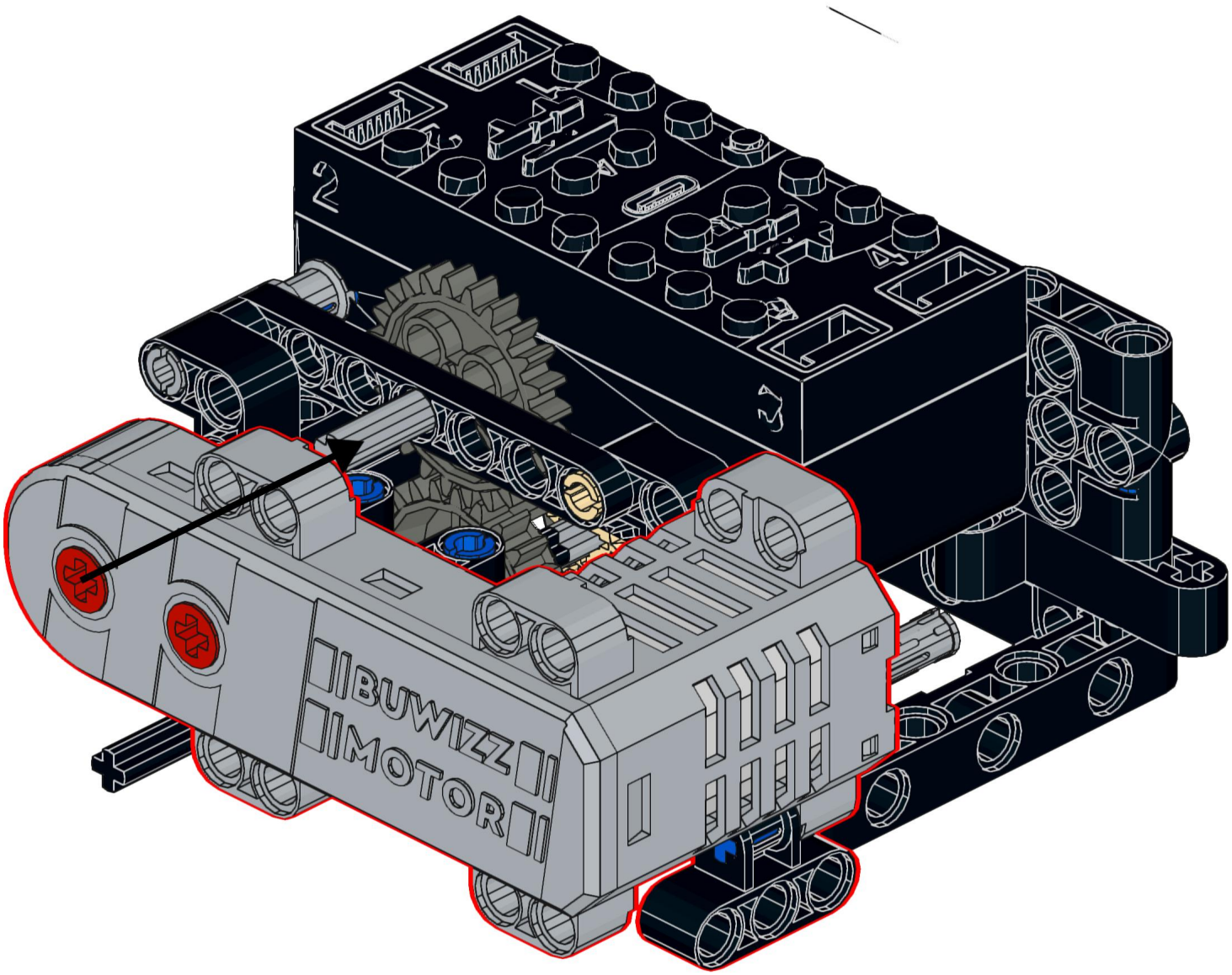

21

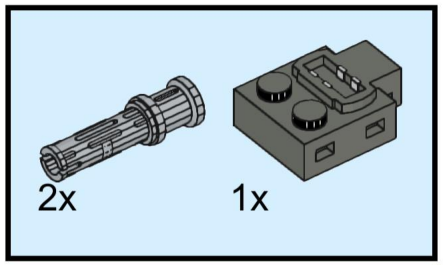

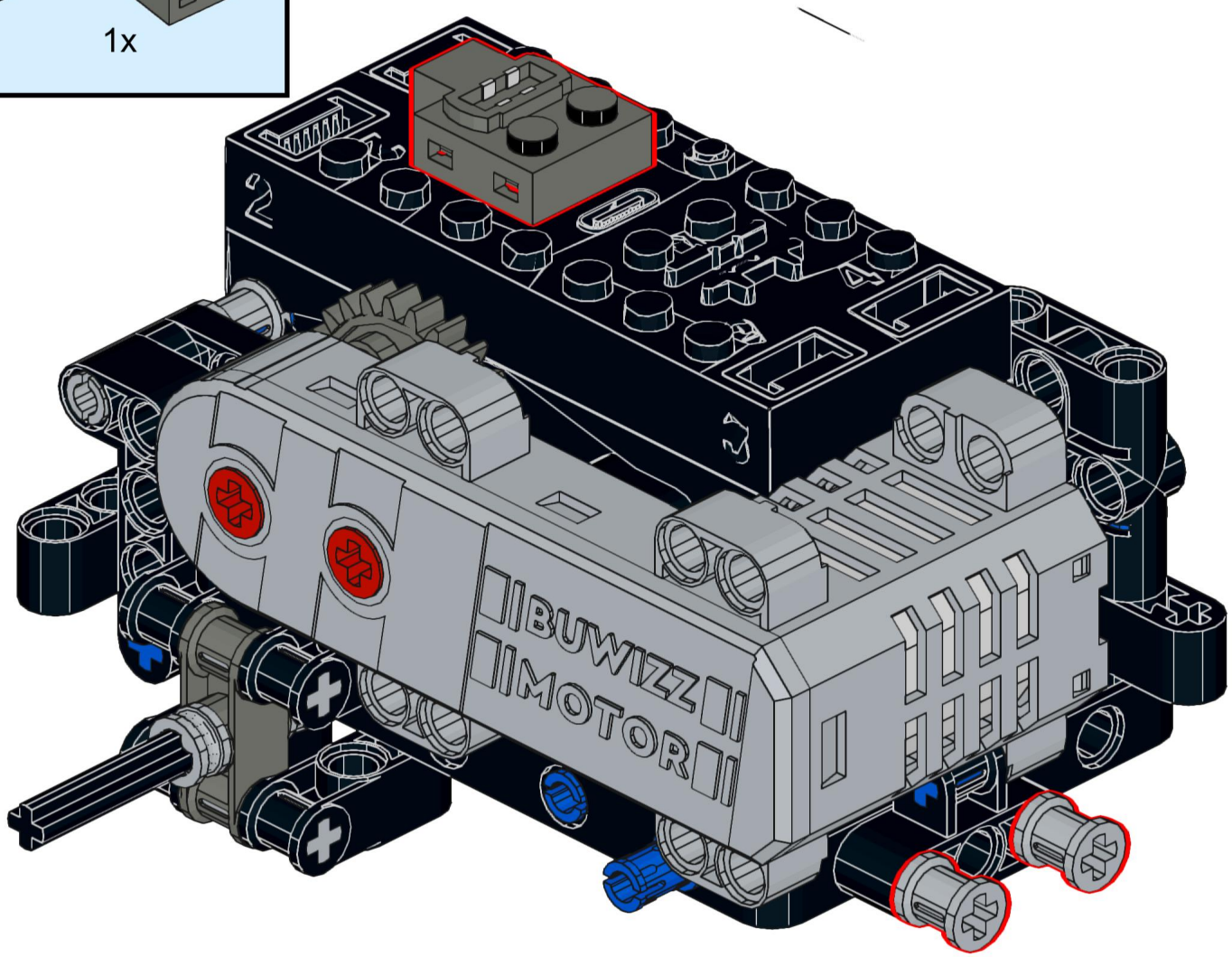

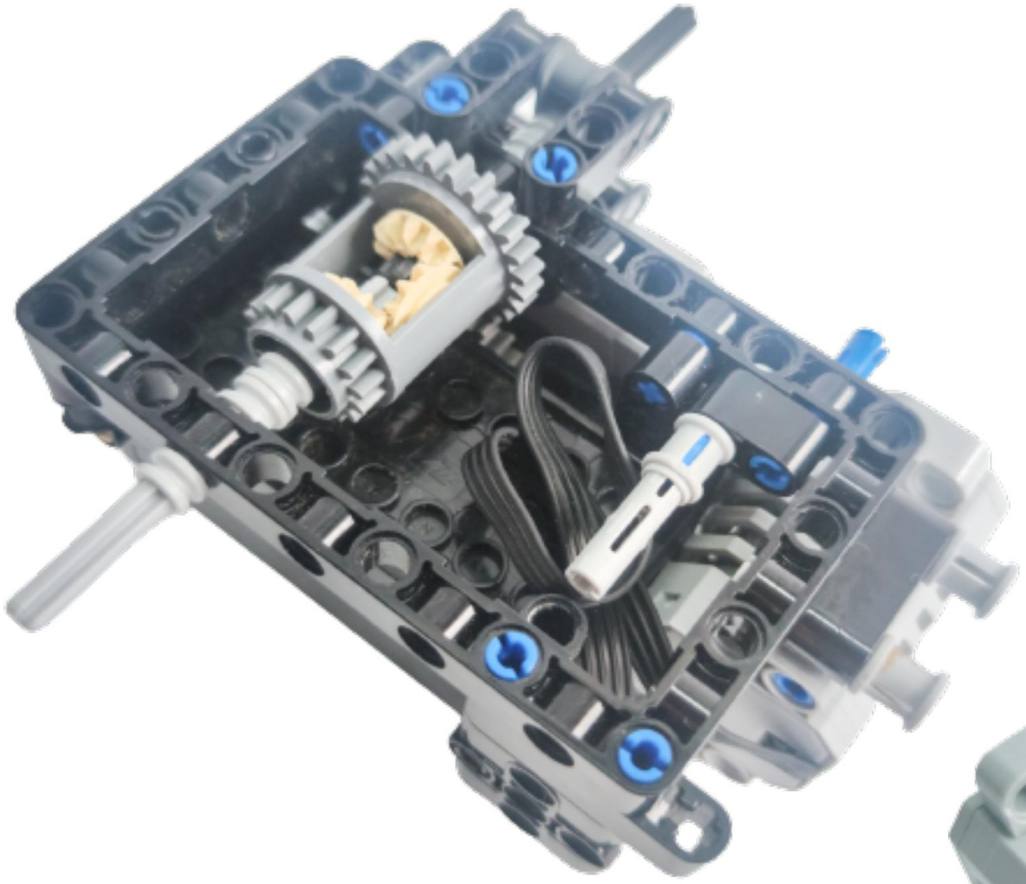

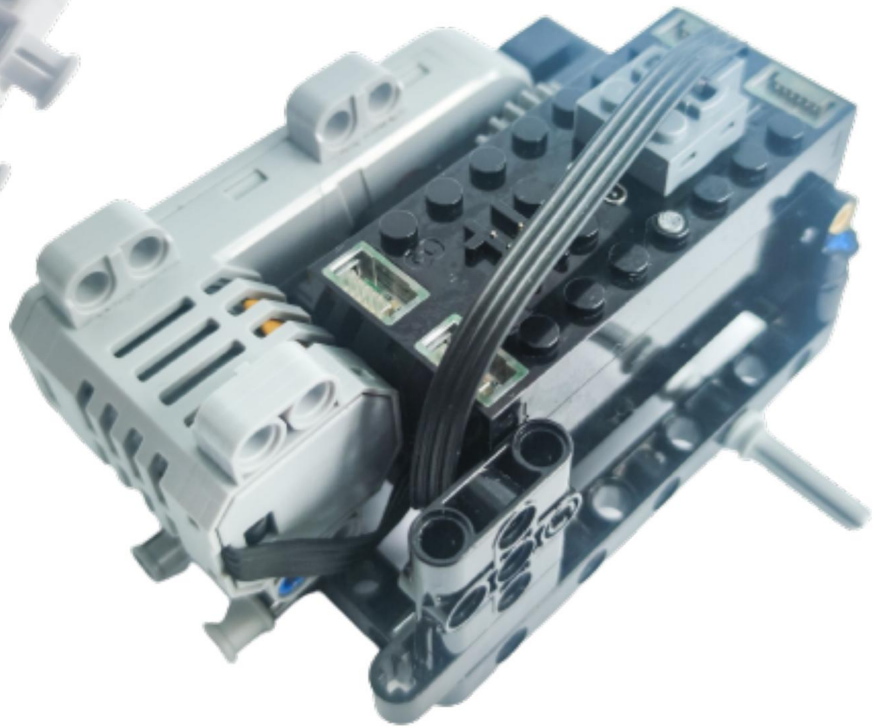

22

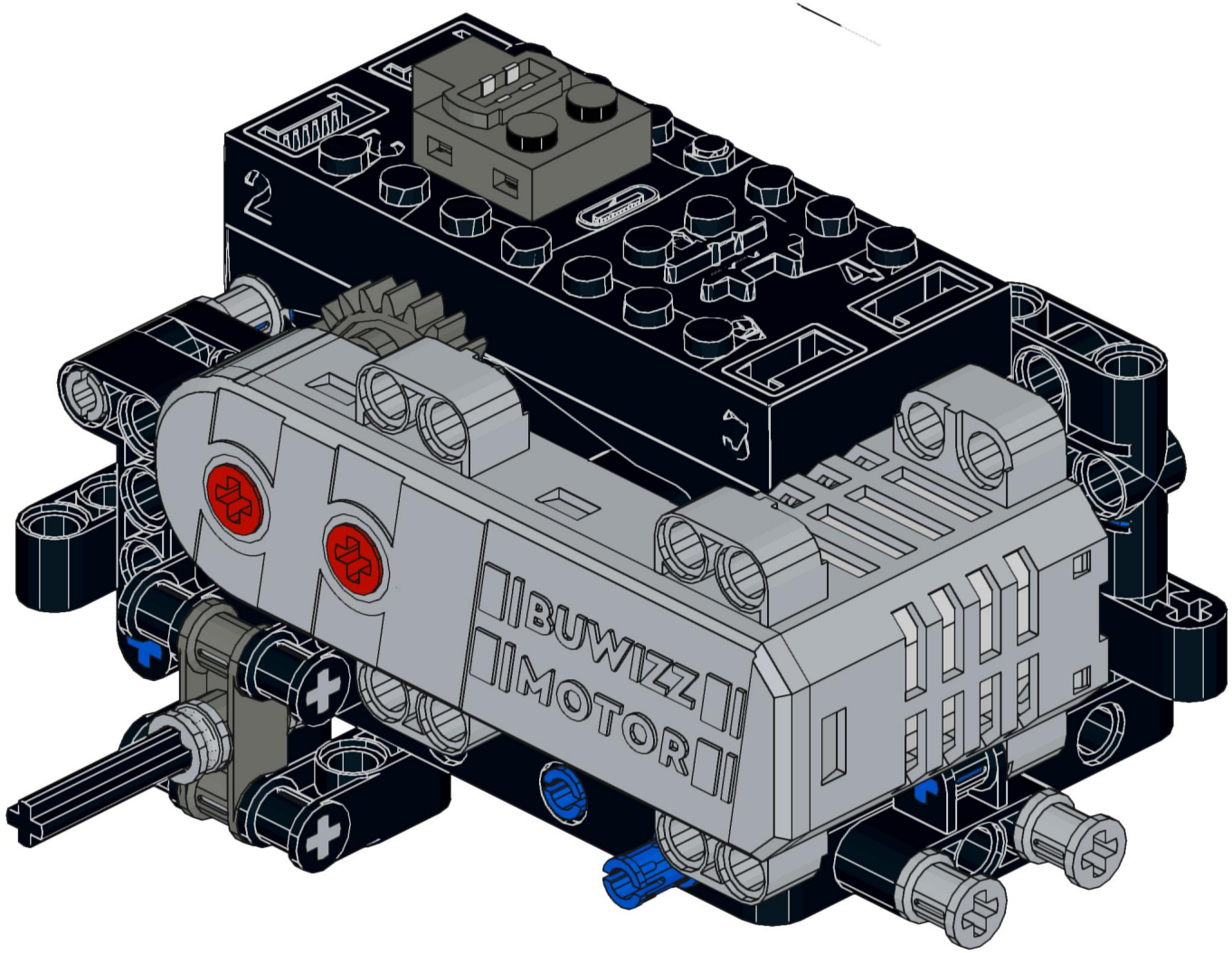

23

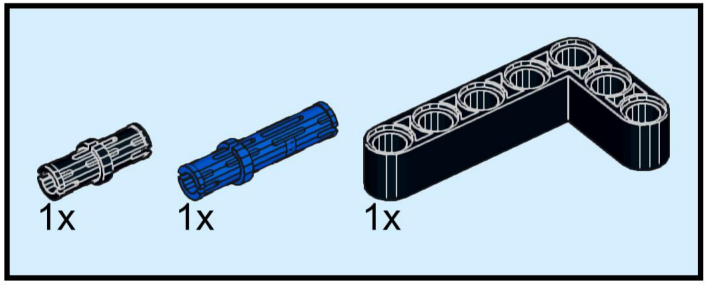

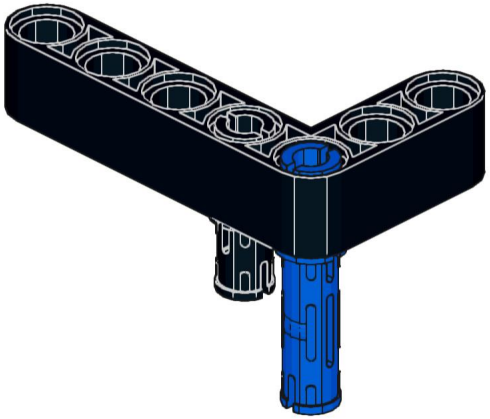

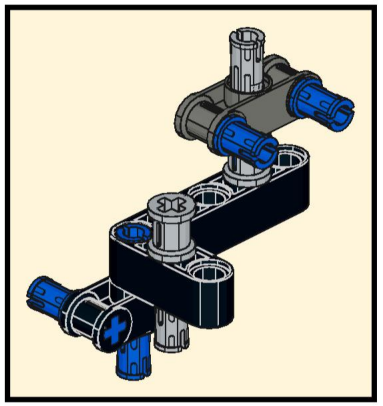

24

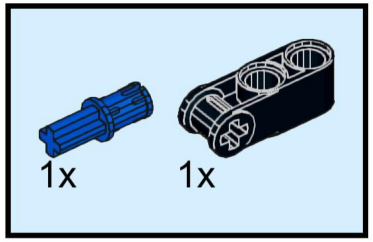

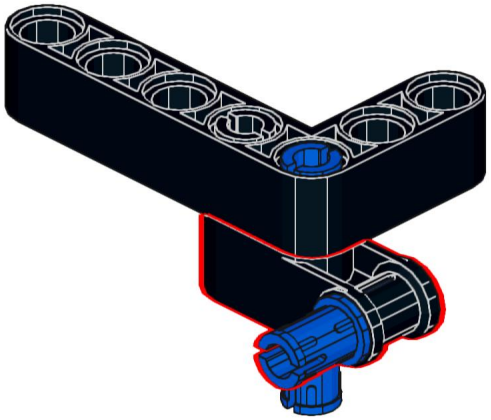

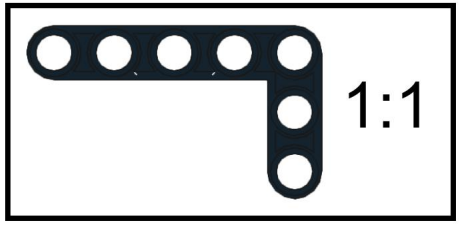

25

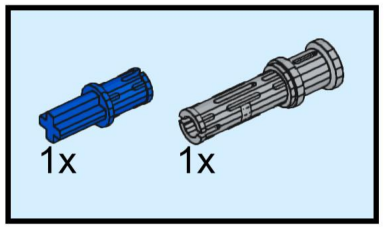

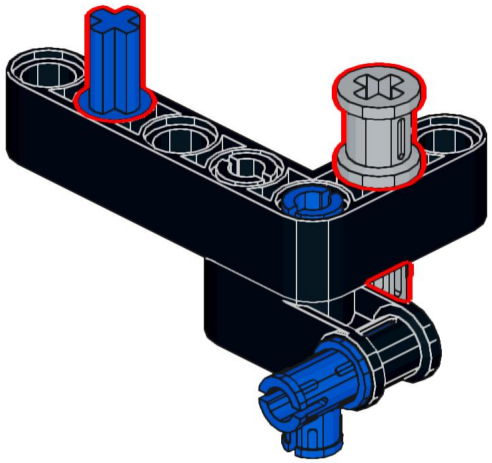

26

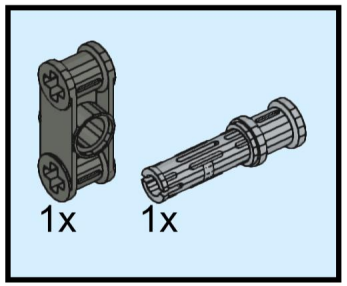

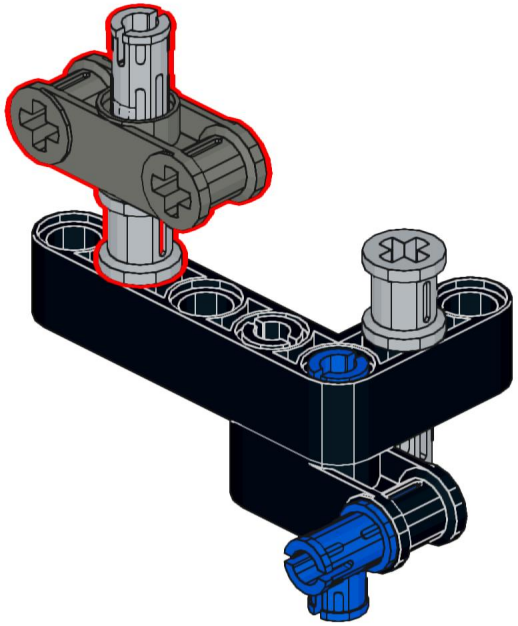

27

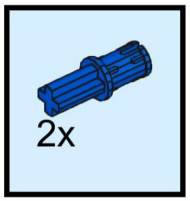

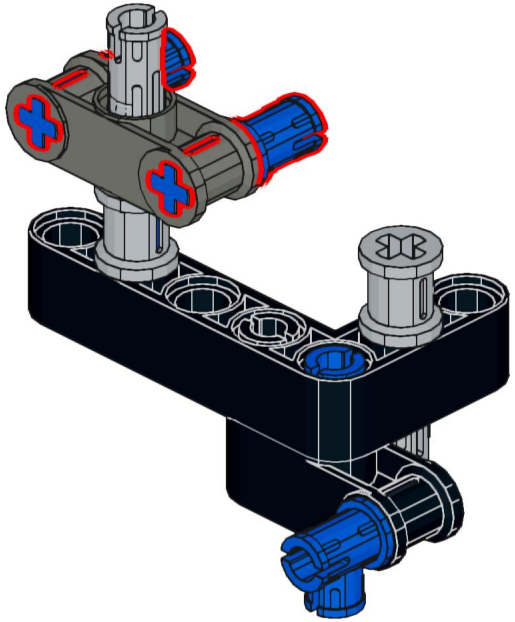

28

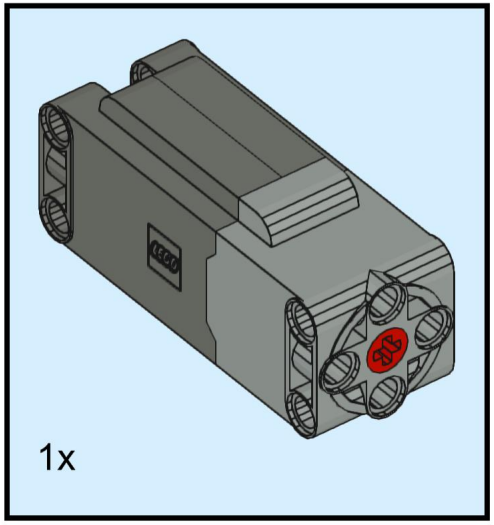

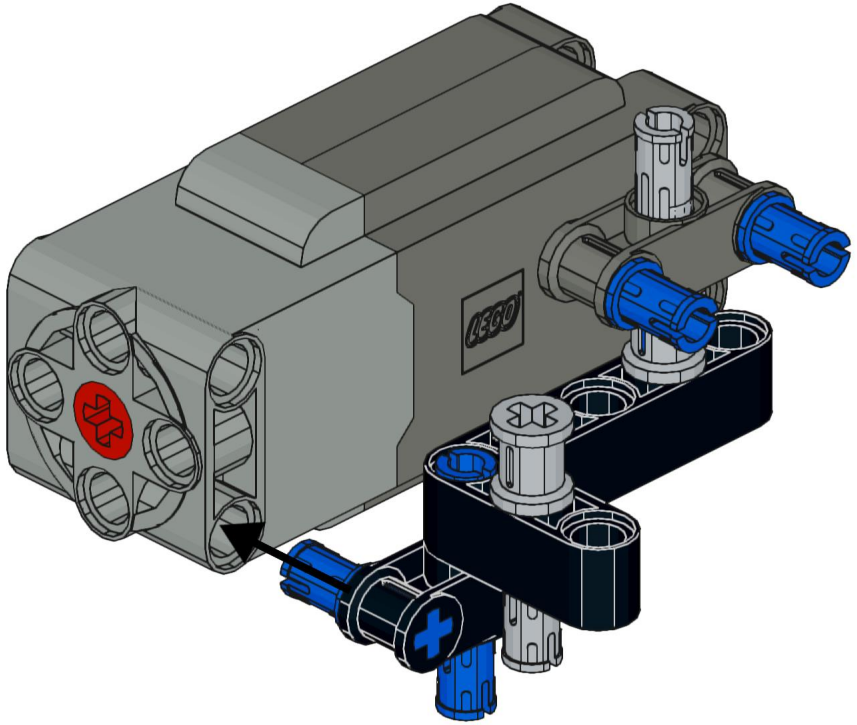

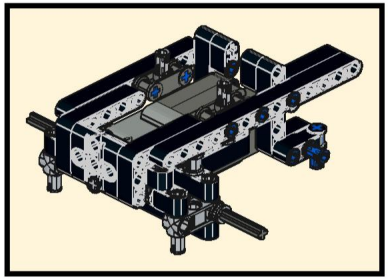

29

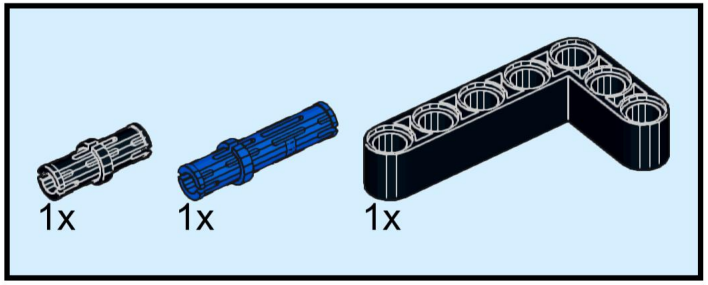

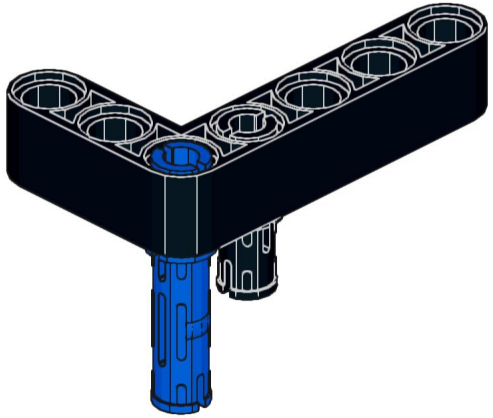

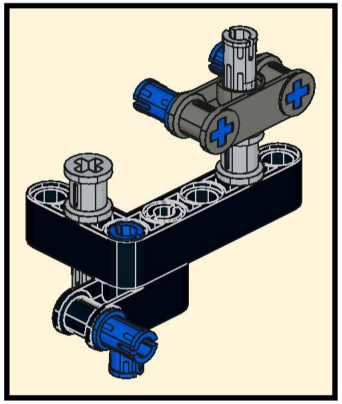

30

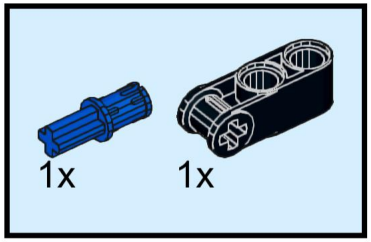

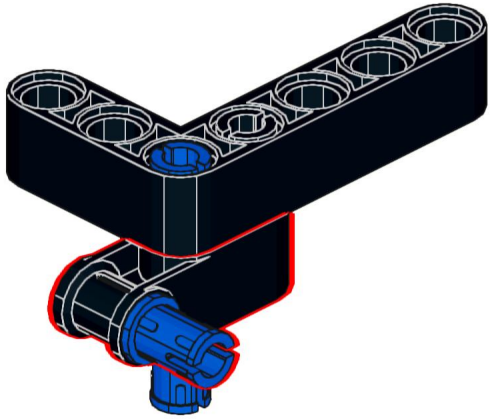

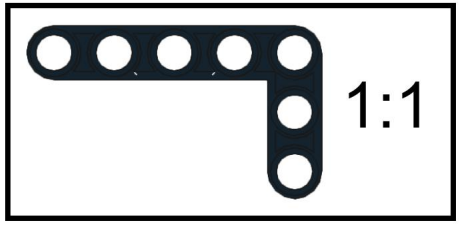

31

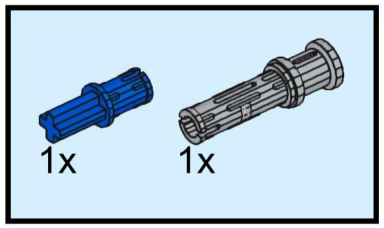

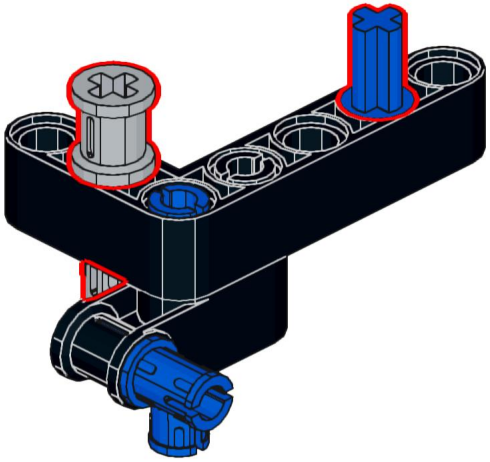

32

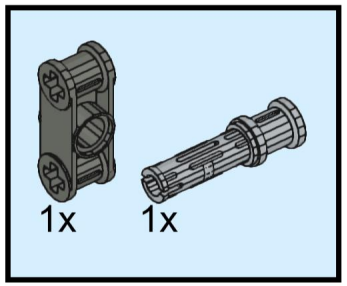

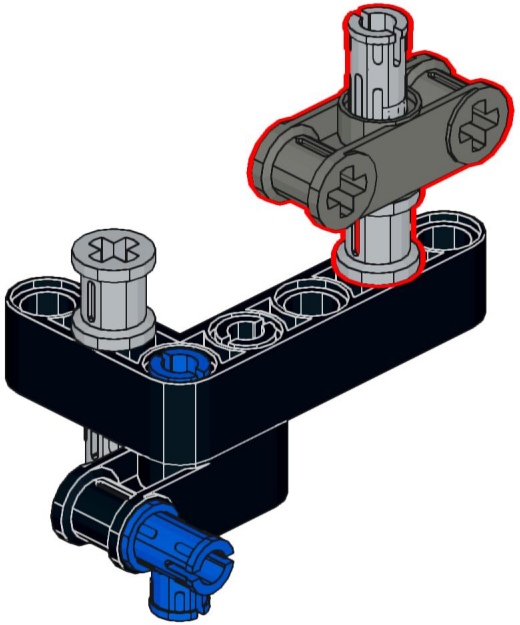

33

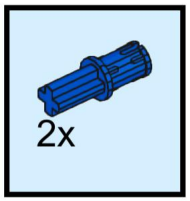

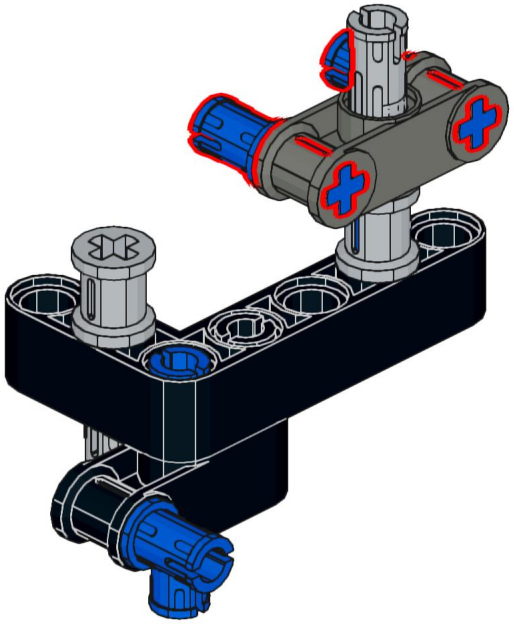

34

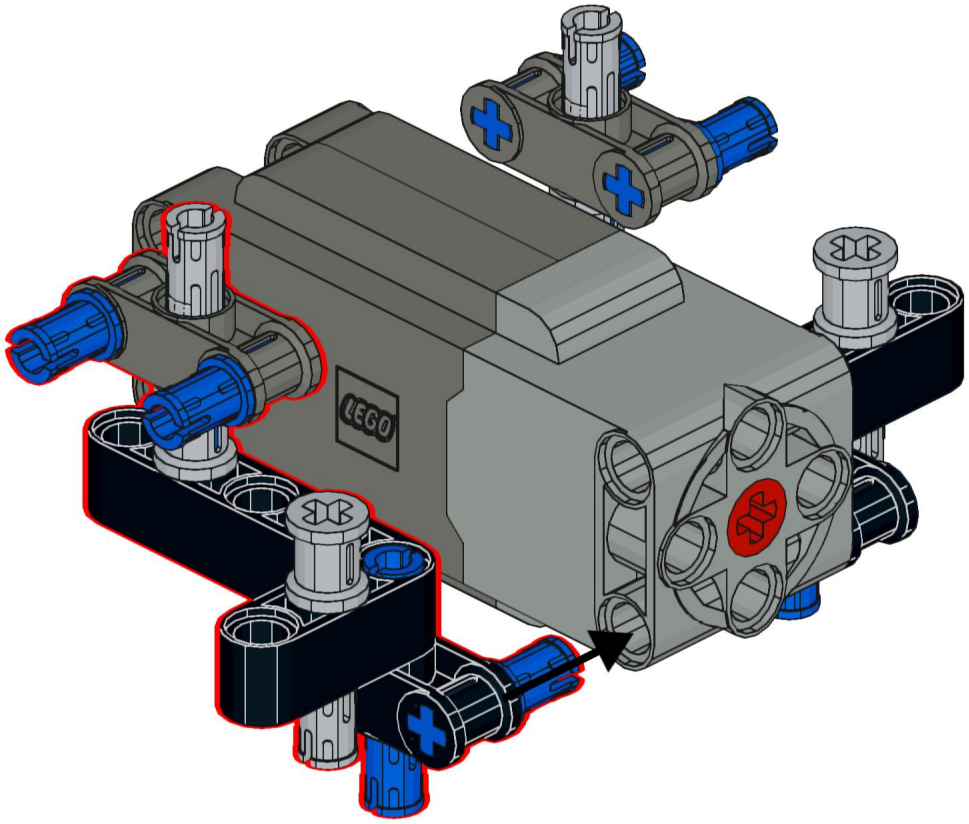

35

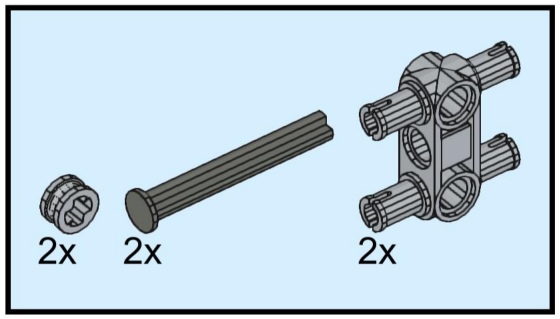

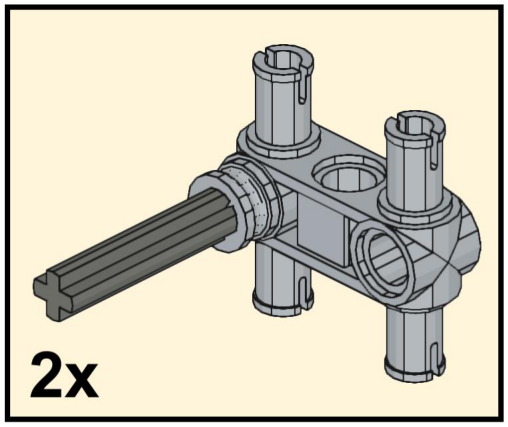

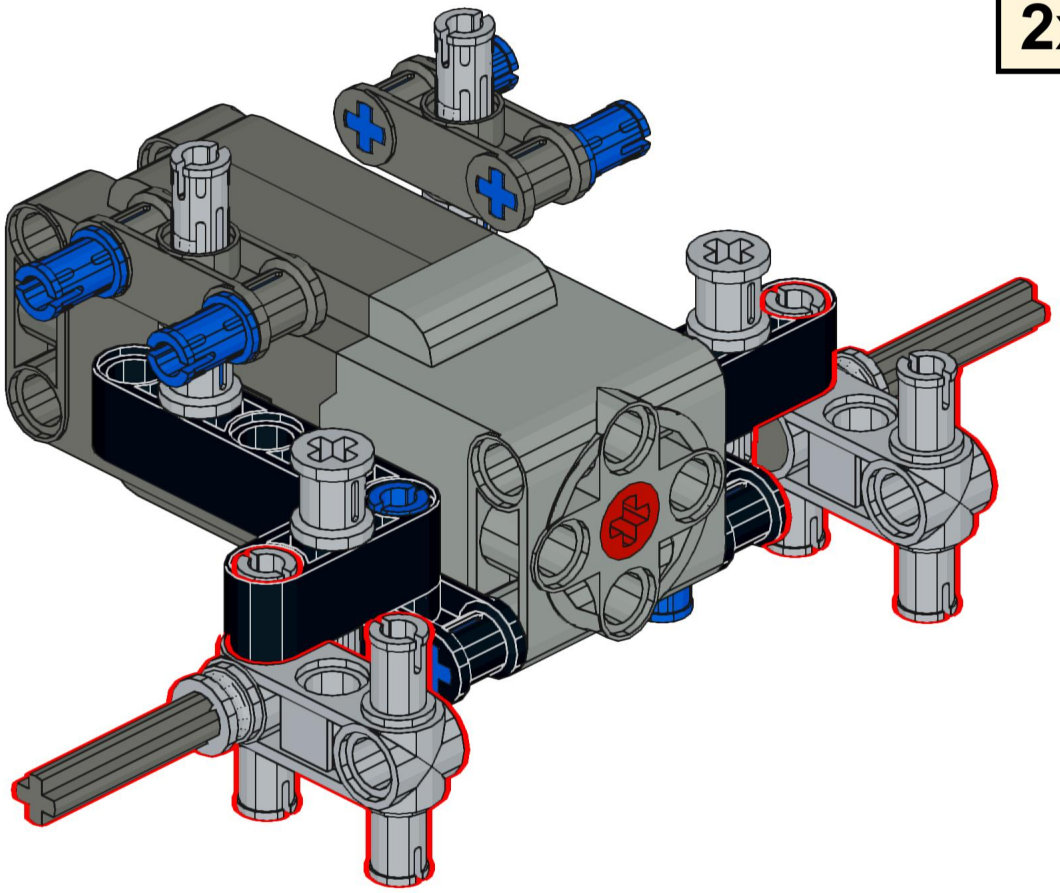

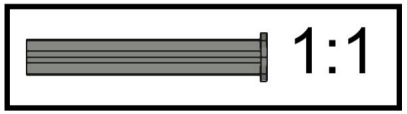

36

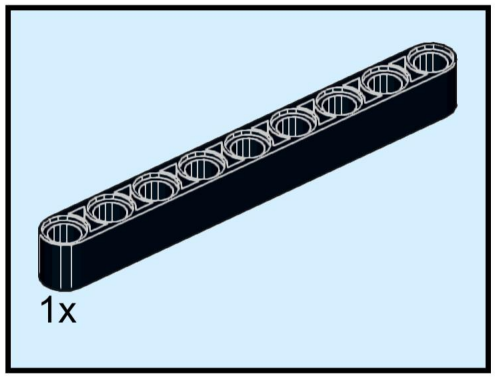

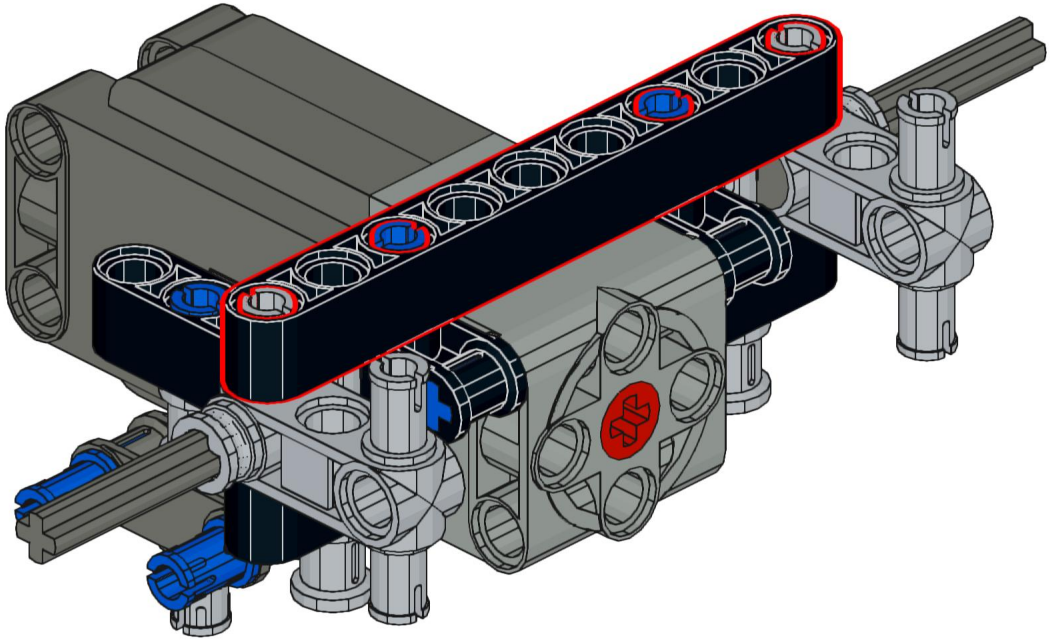

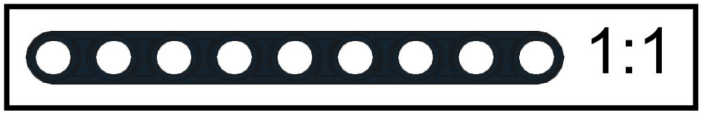

37

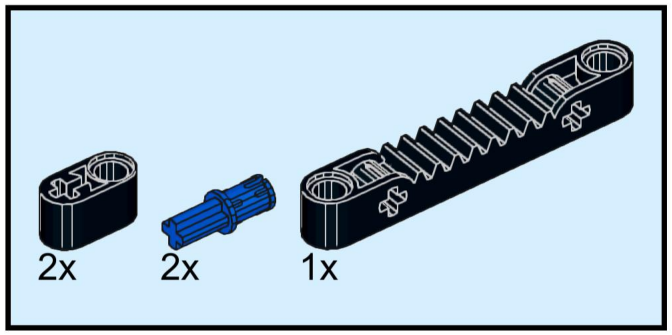

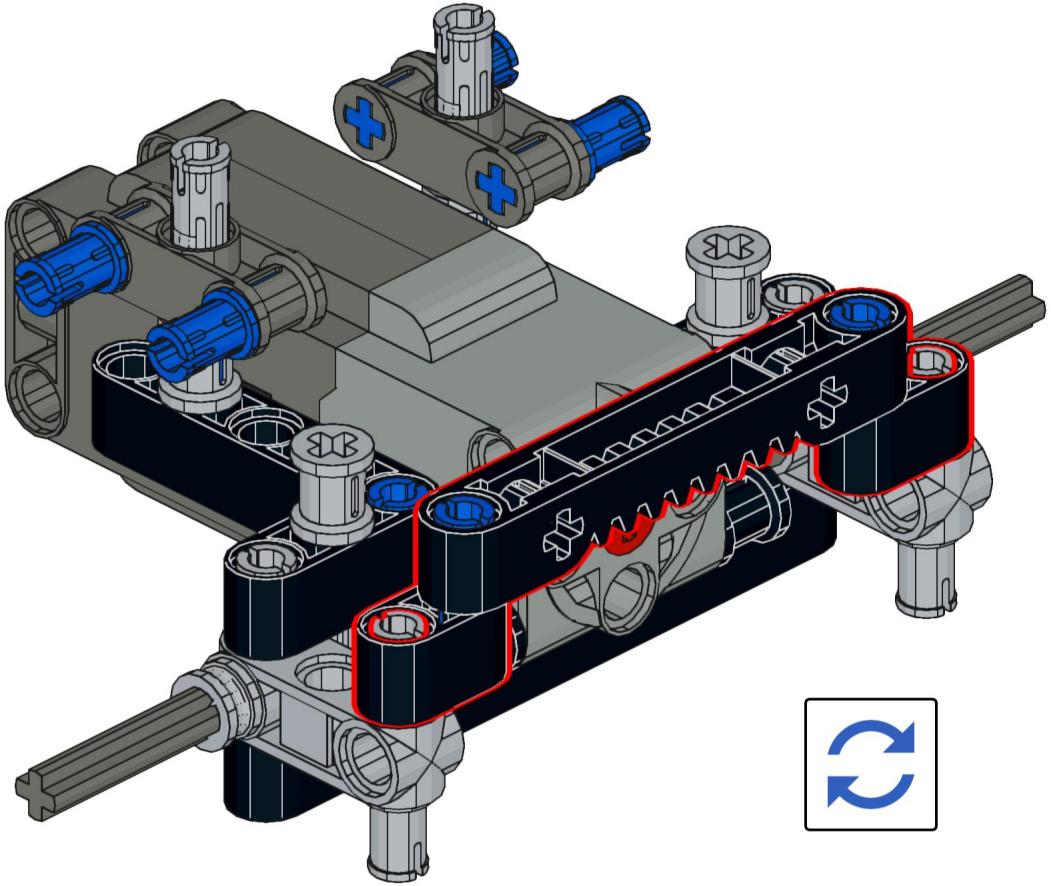

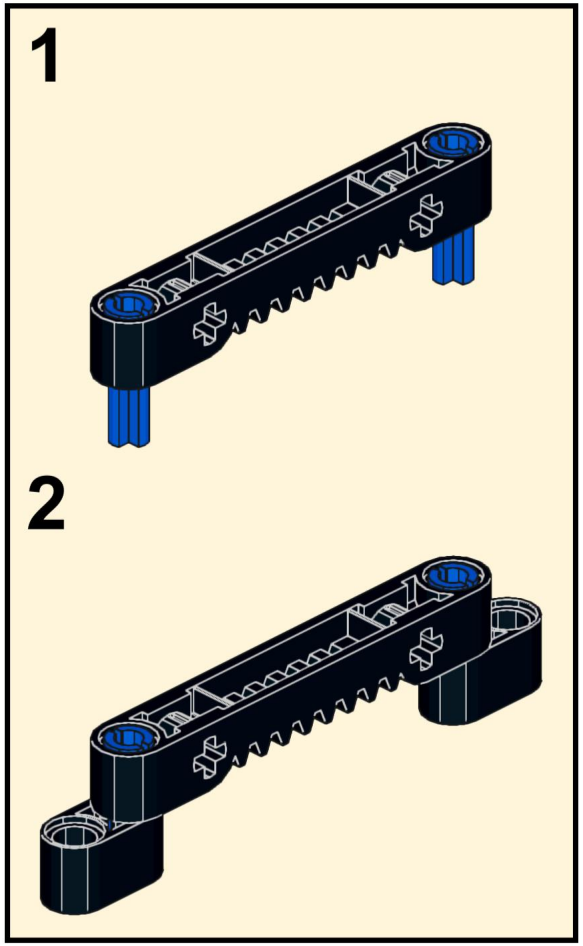

38

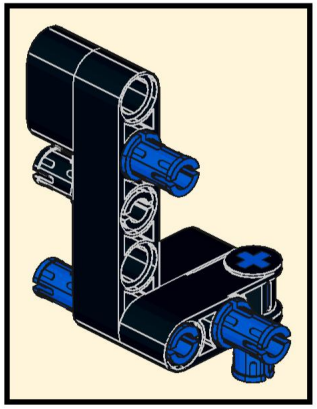

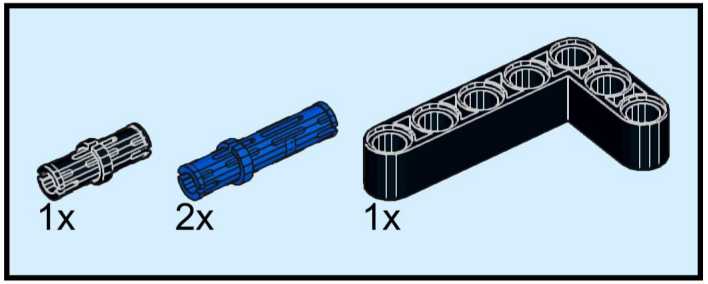

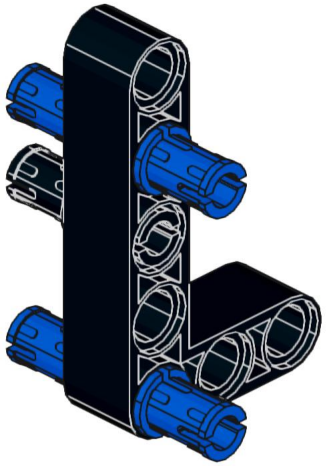

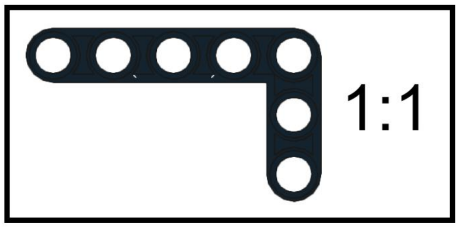

39

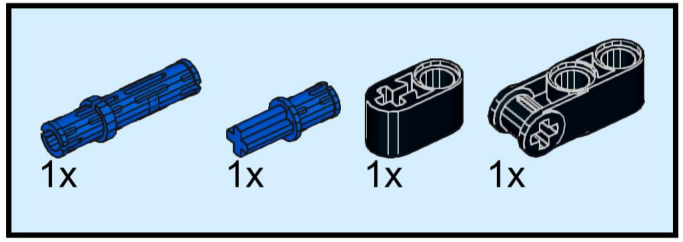

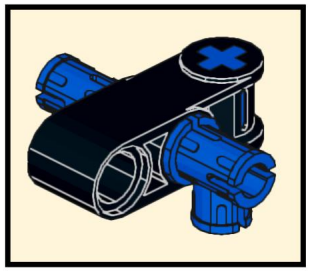

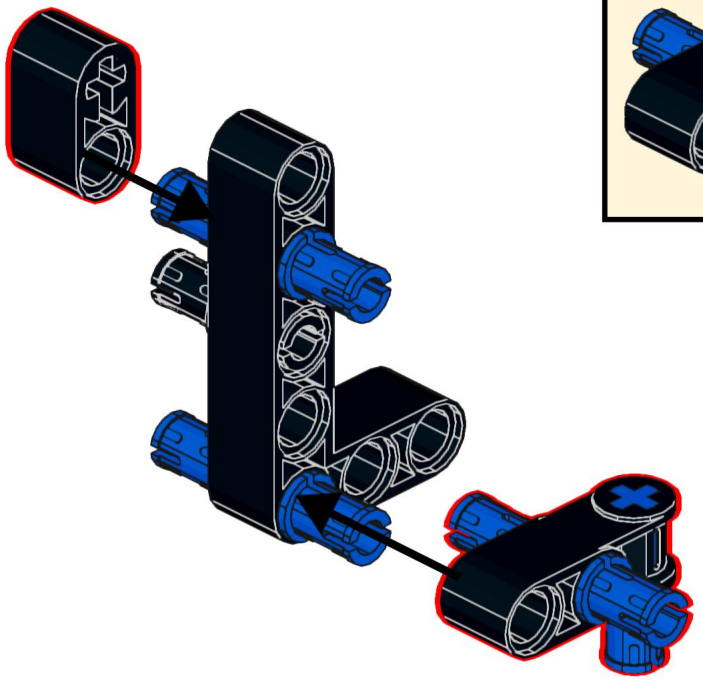

40

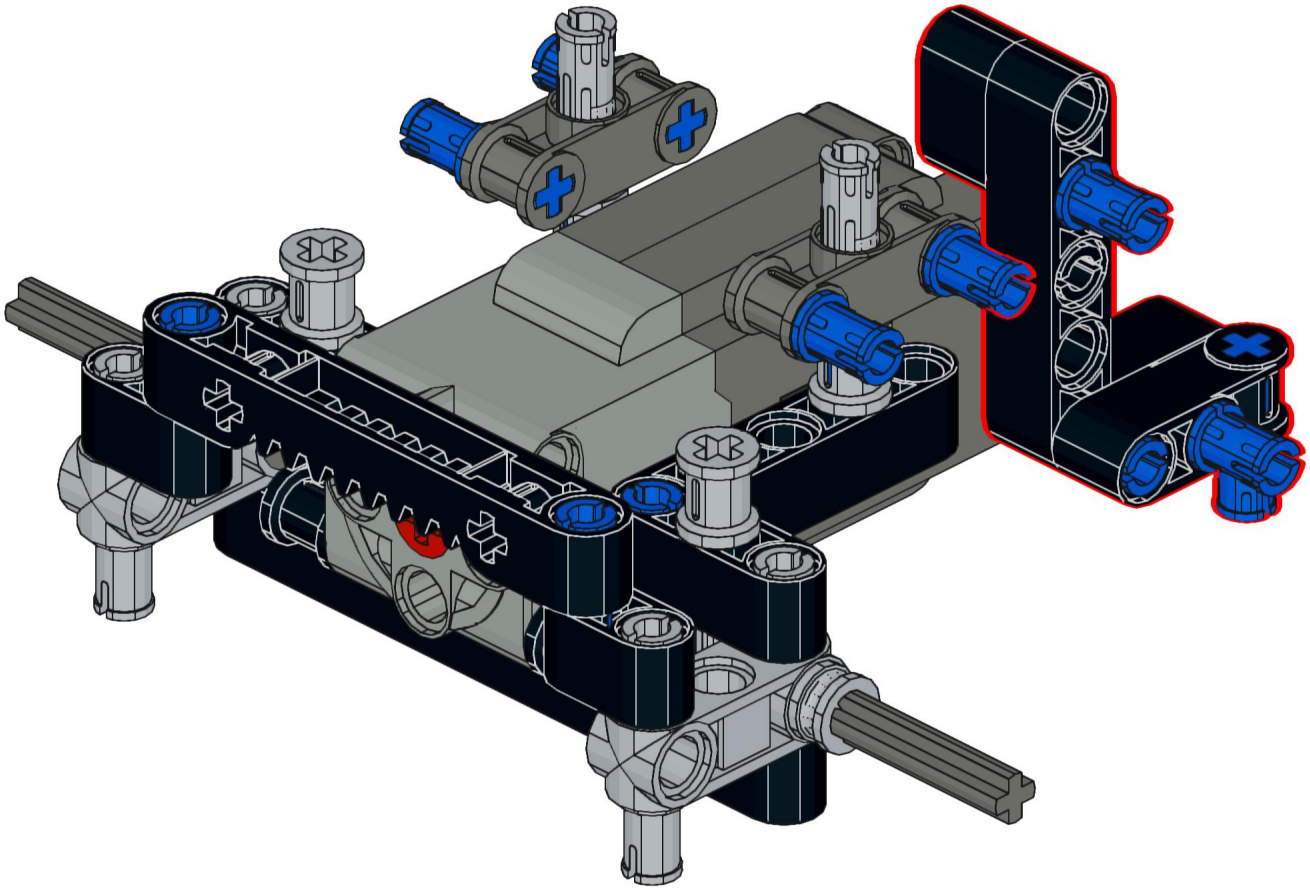

41

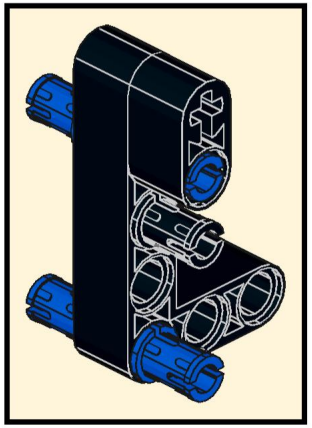

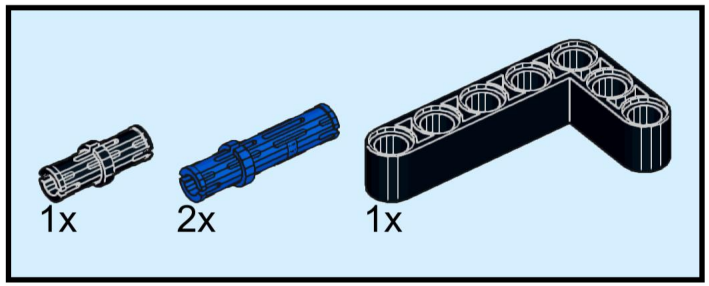

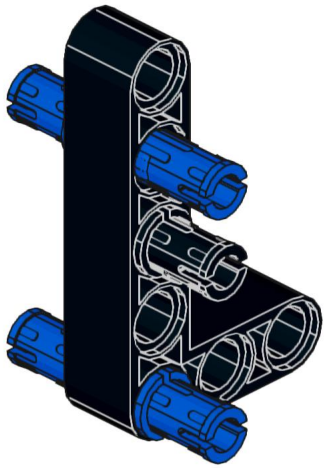

42

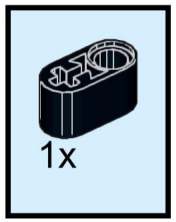

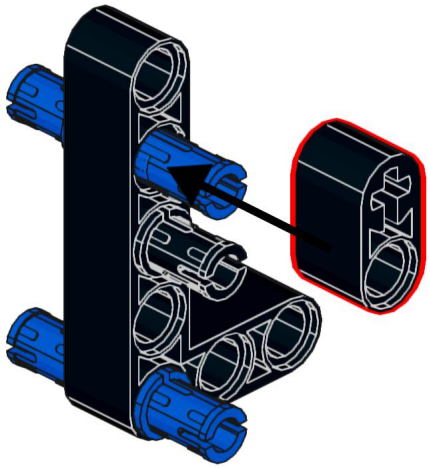

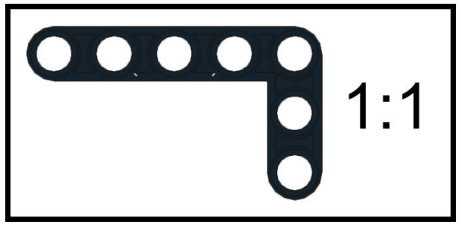

43

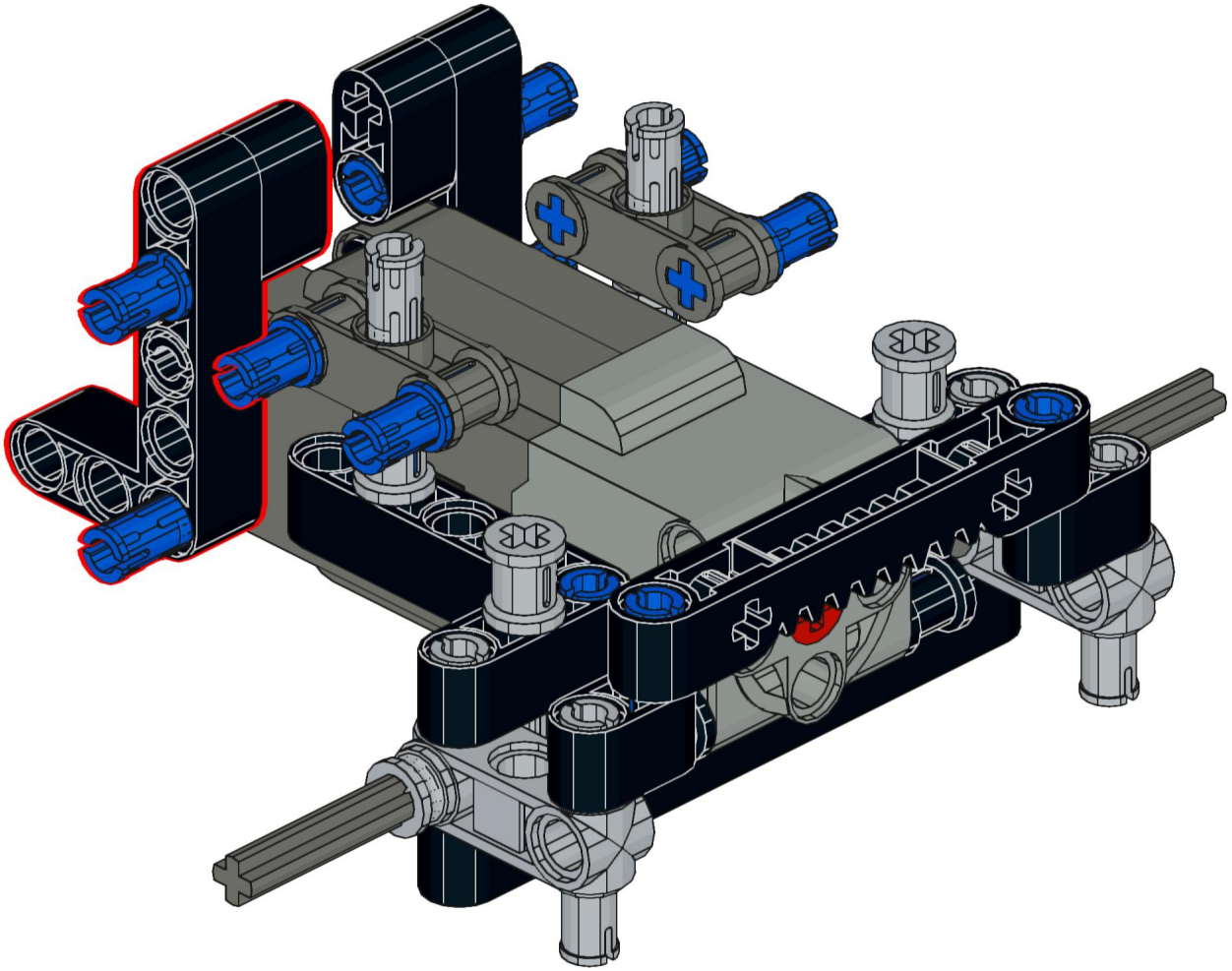

44

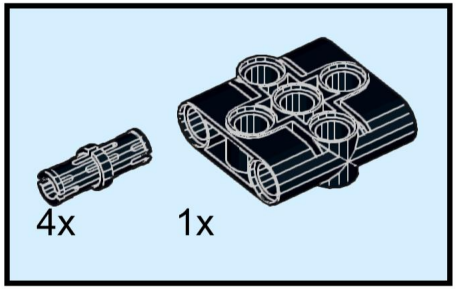

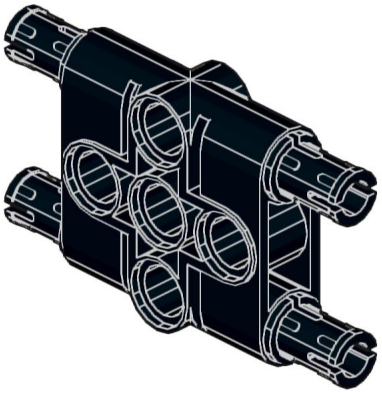

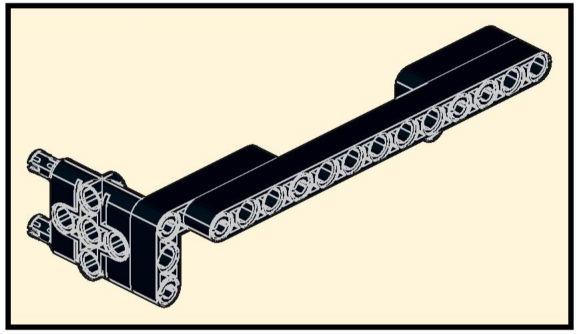

45

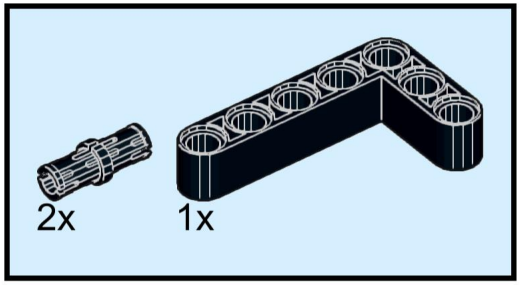

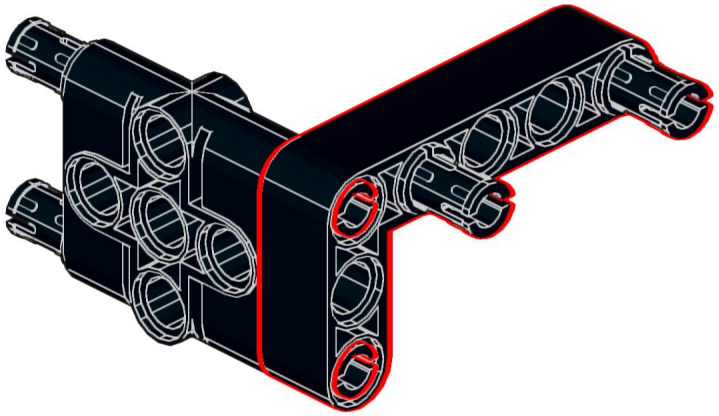

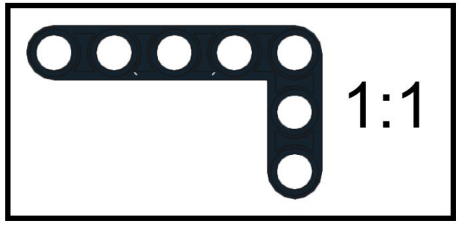

46

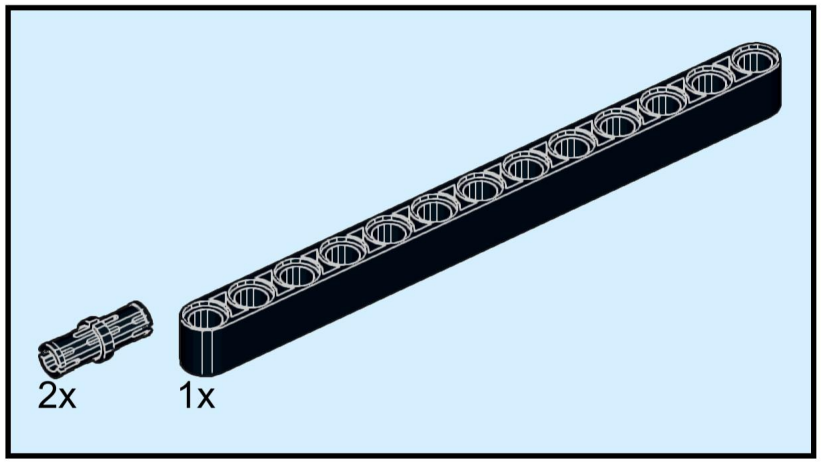

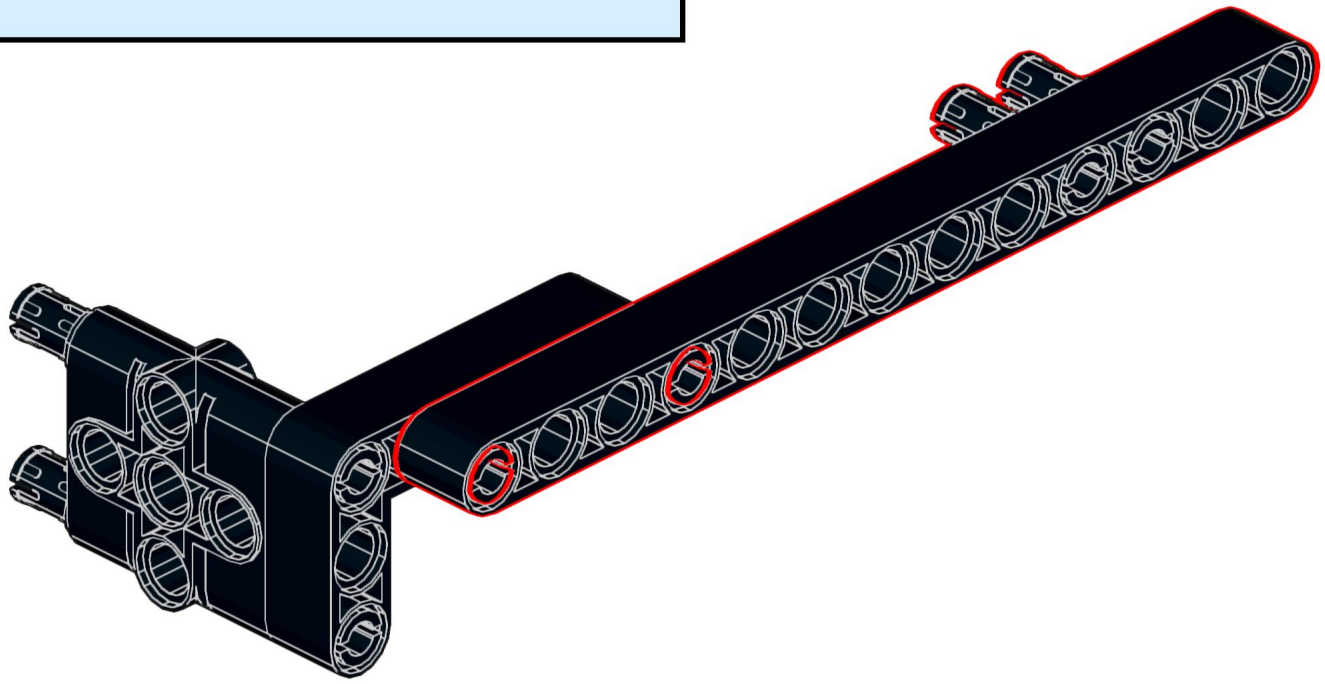

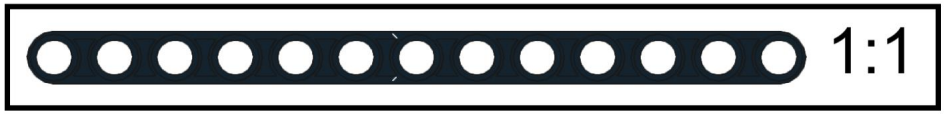

47

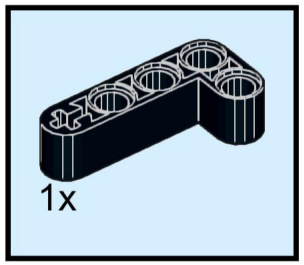

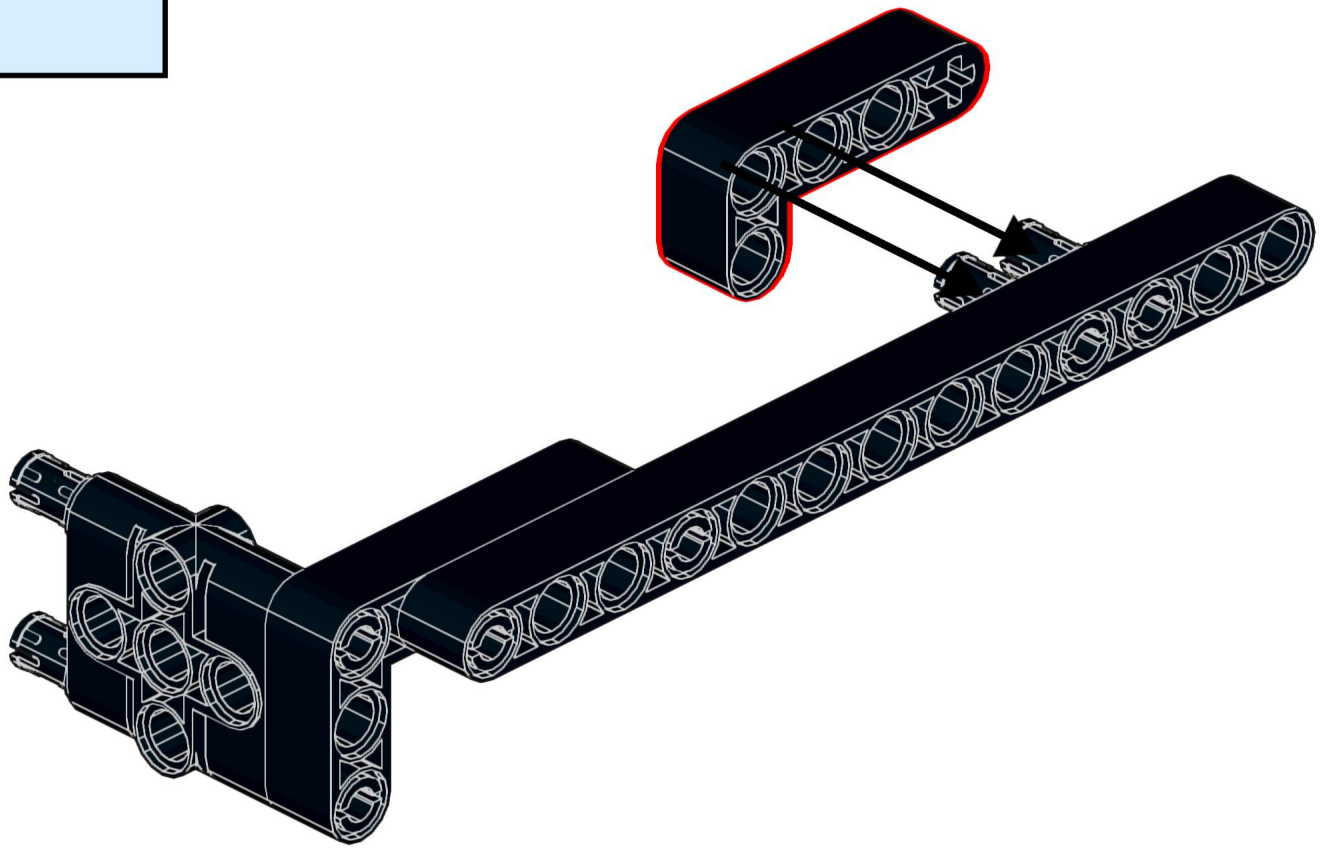

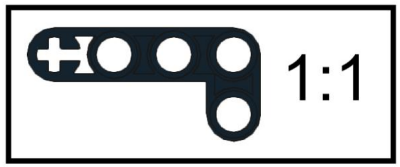

48

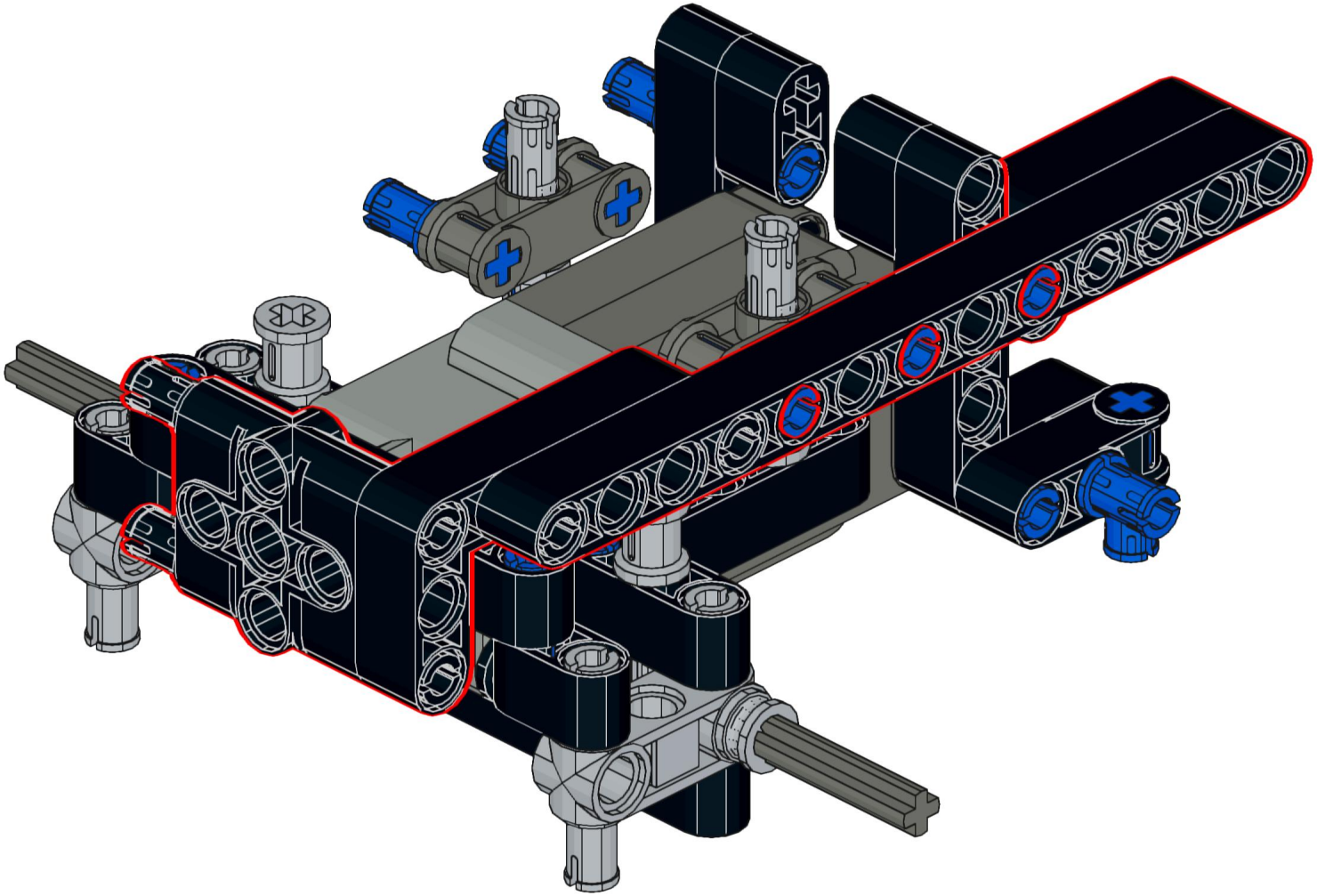

49

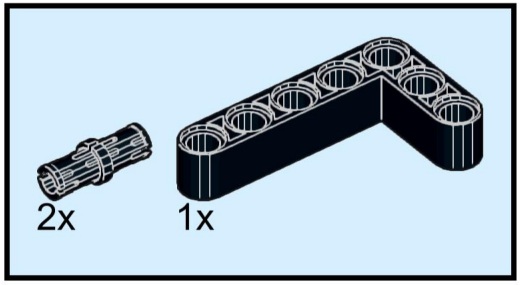

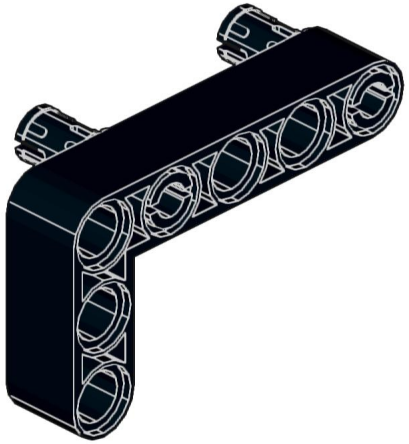

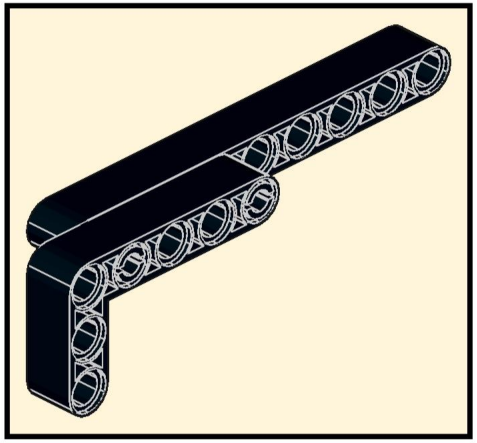

50

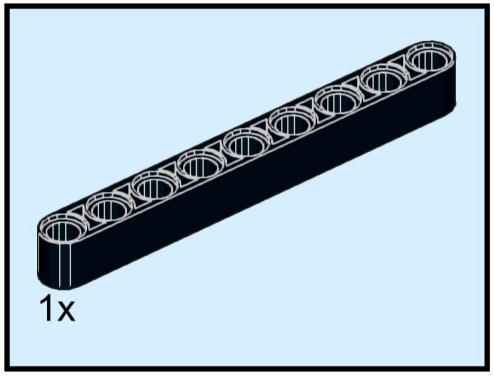

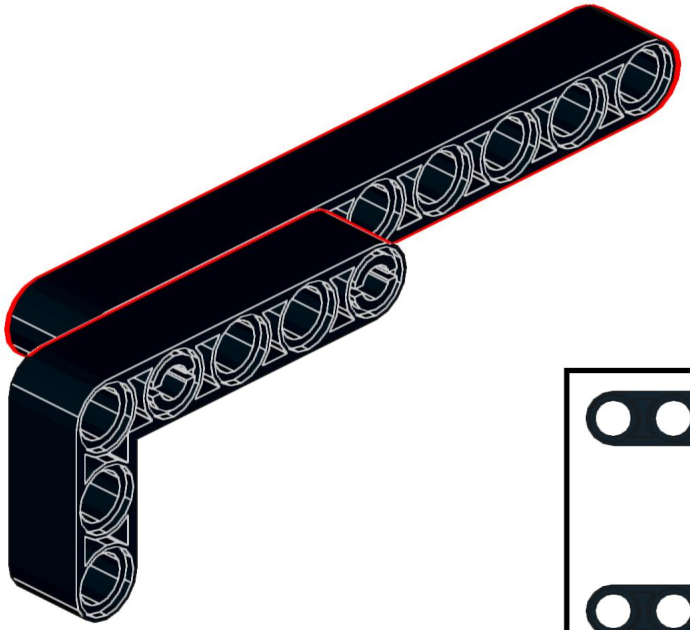

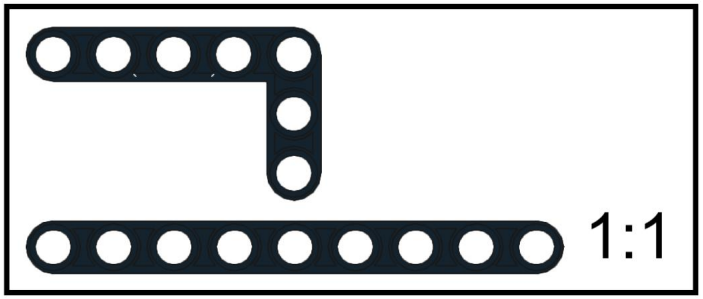

51

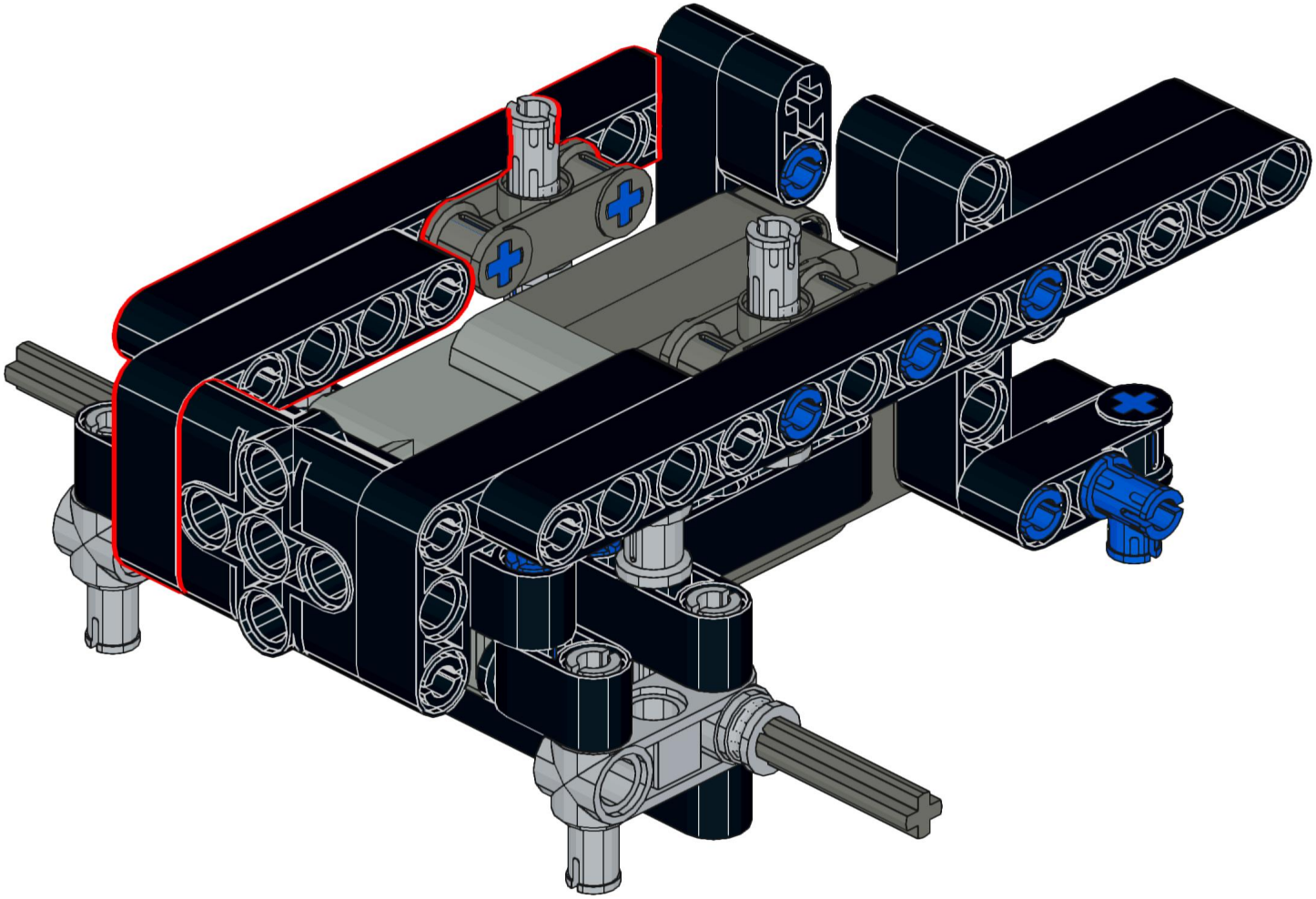

1:1

52

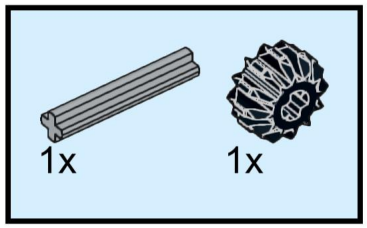

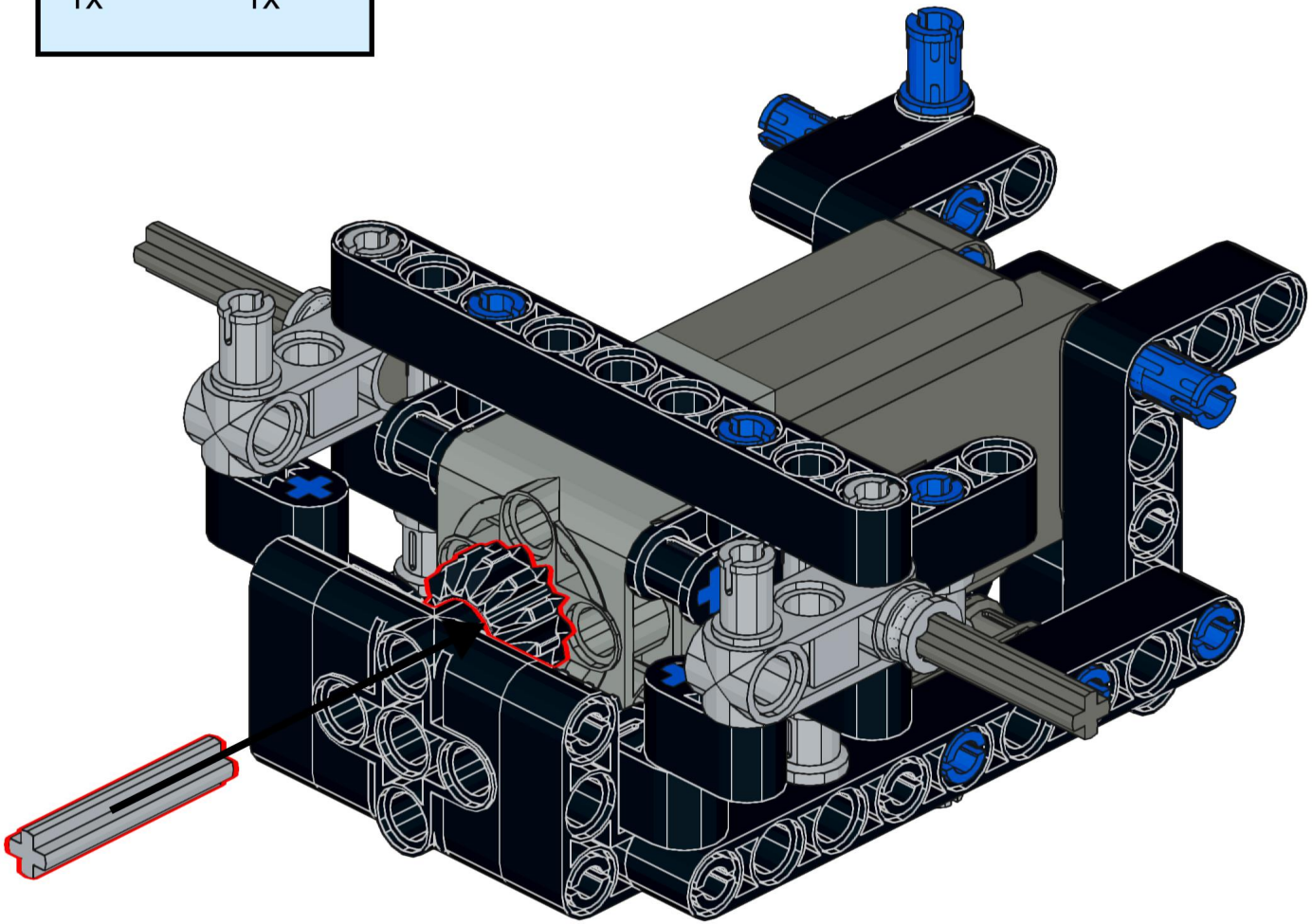

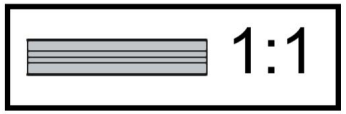

53

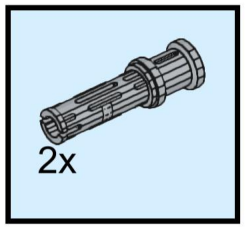

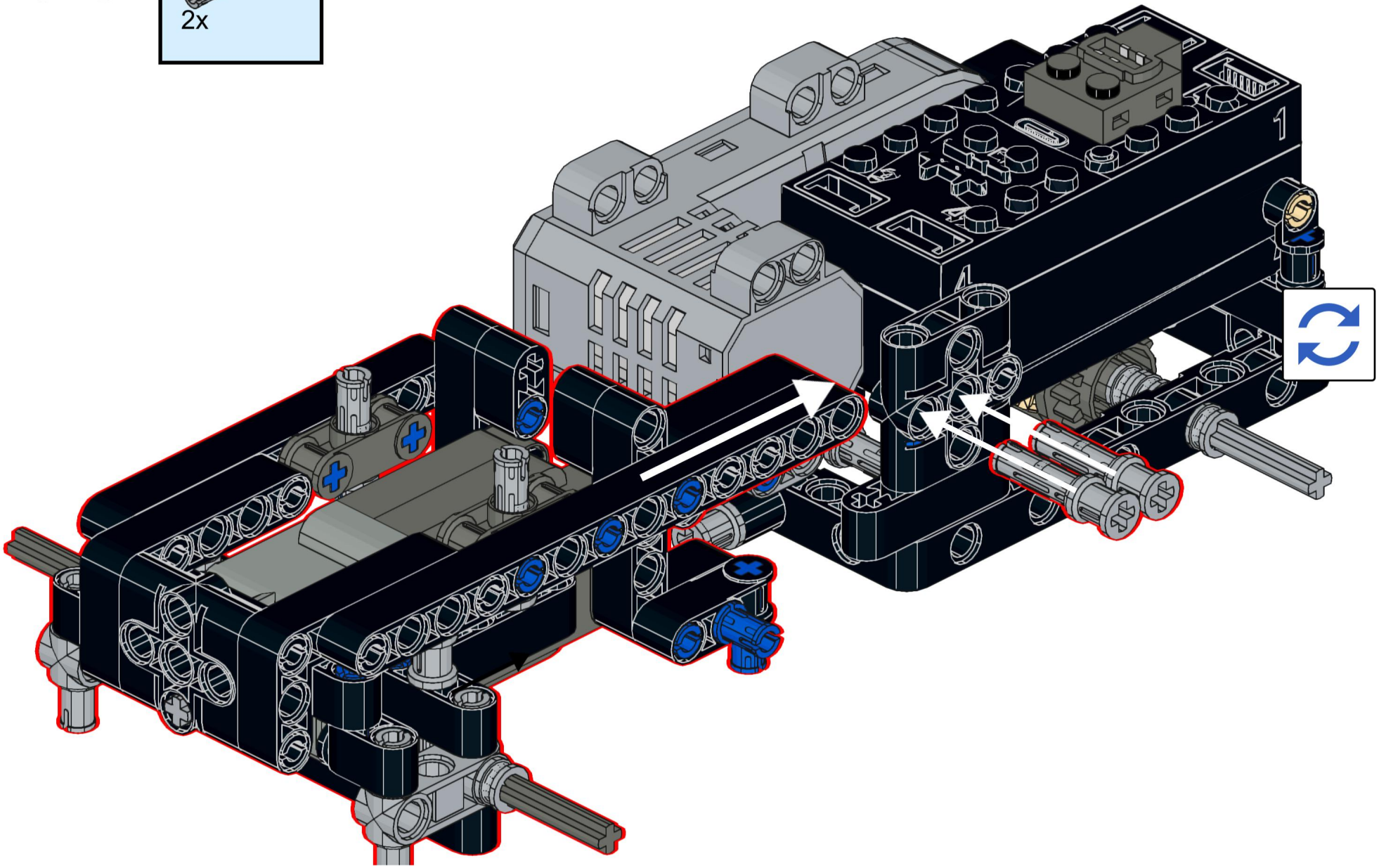

54

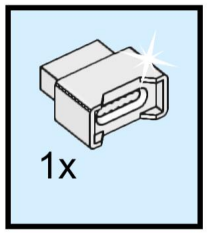

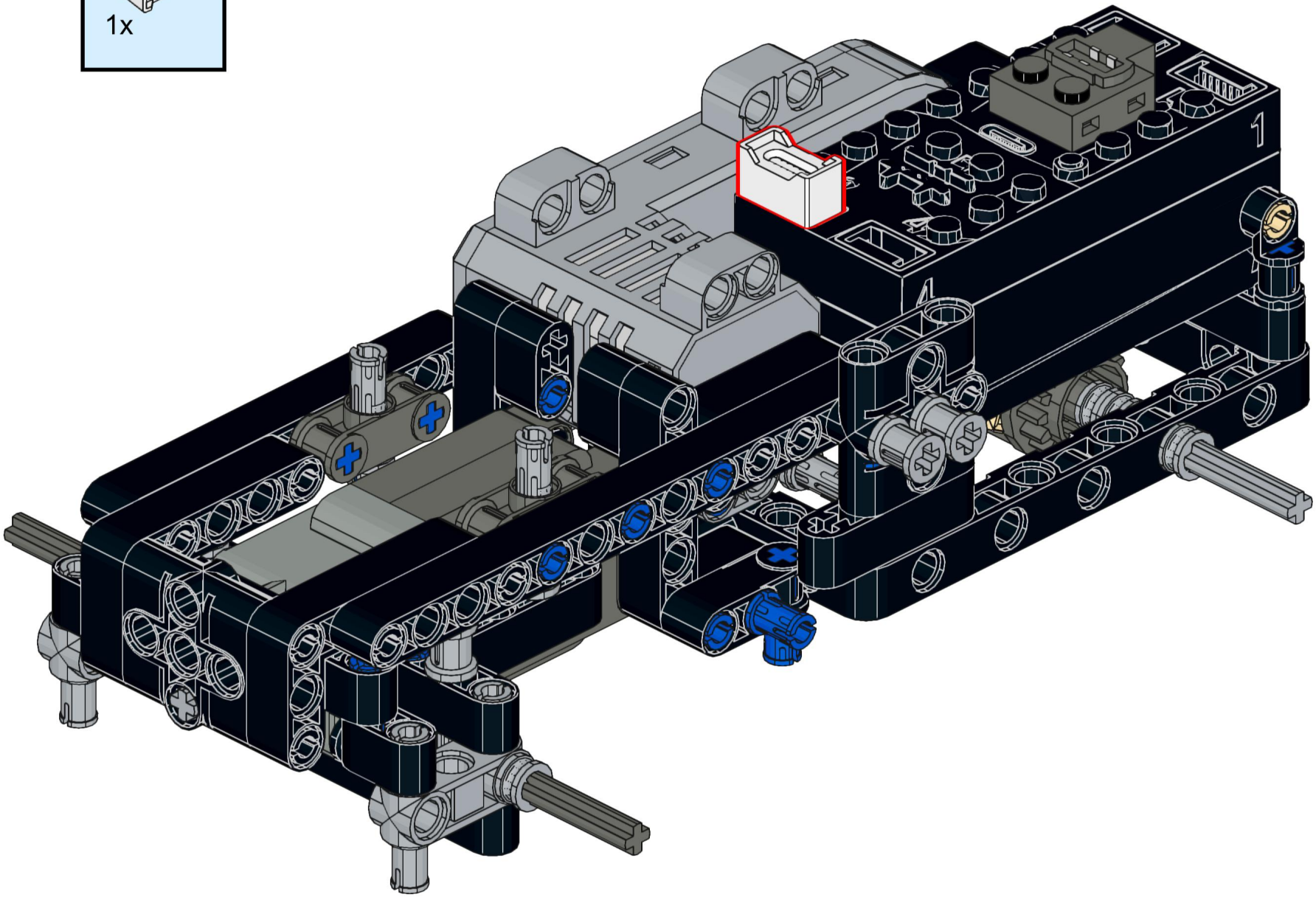

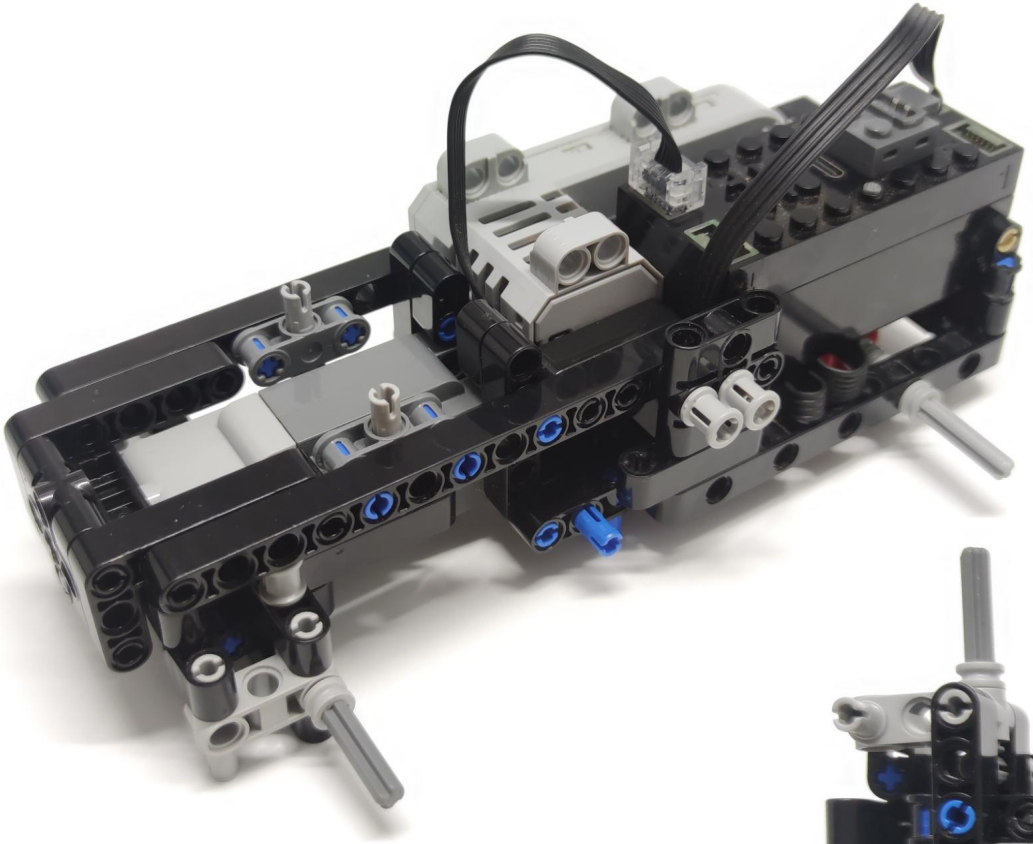

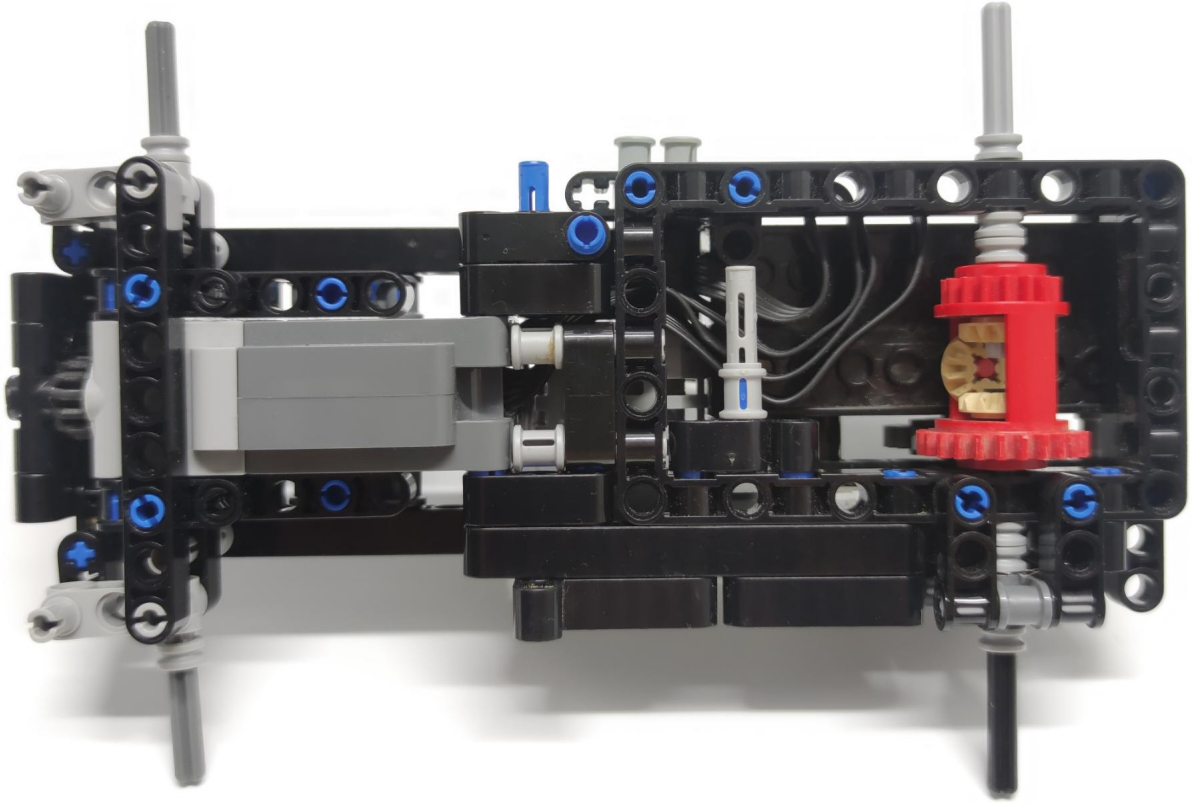

55

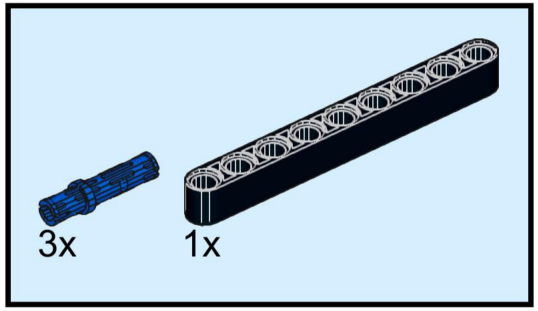

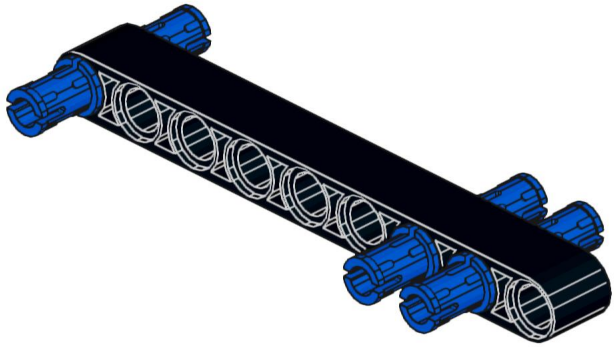

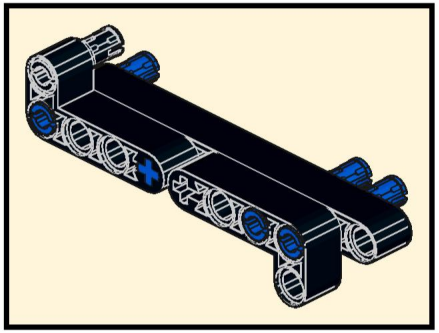

56

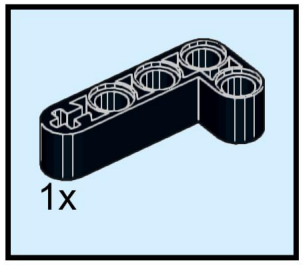

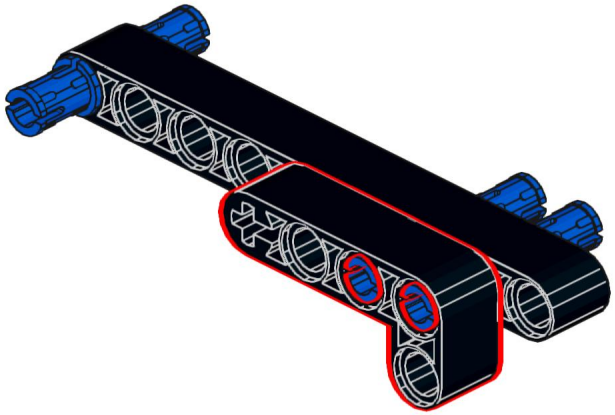

57

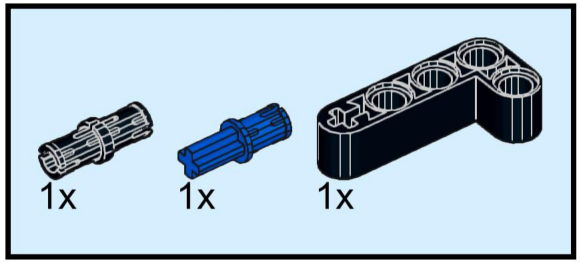

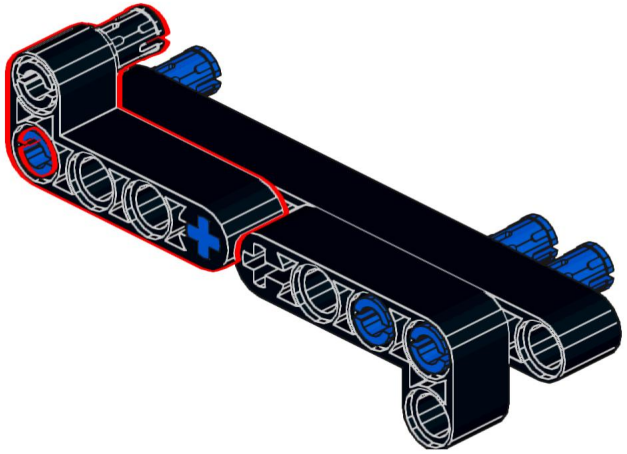

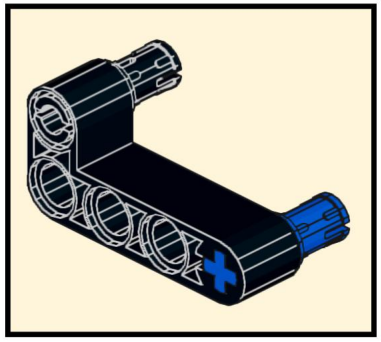

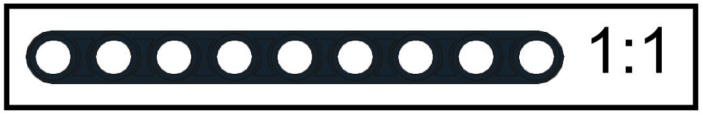

58

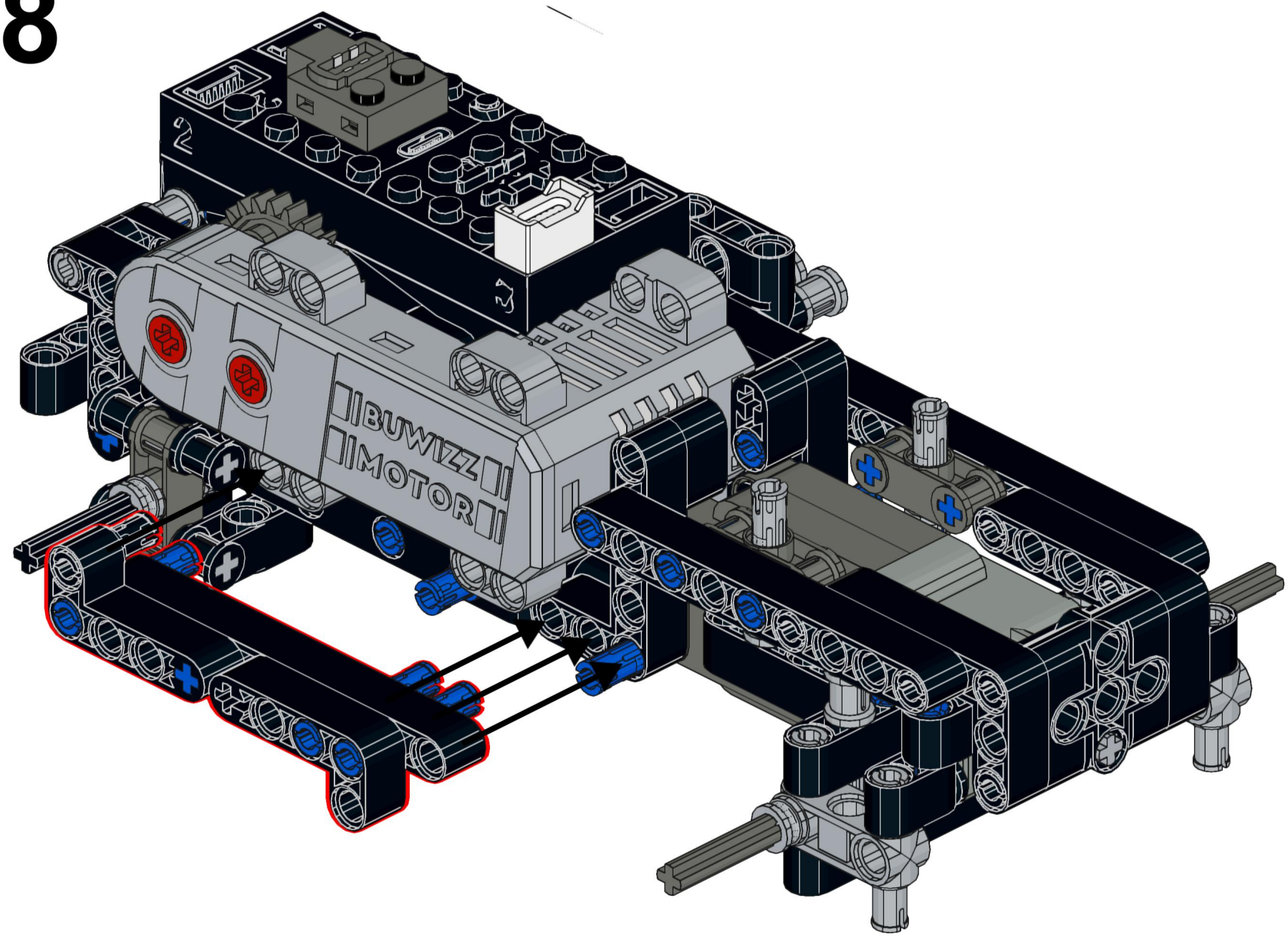

59

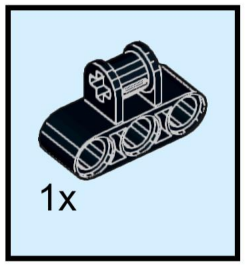

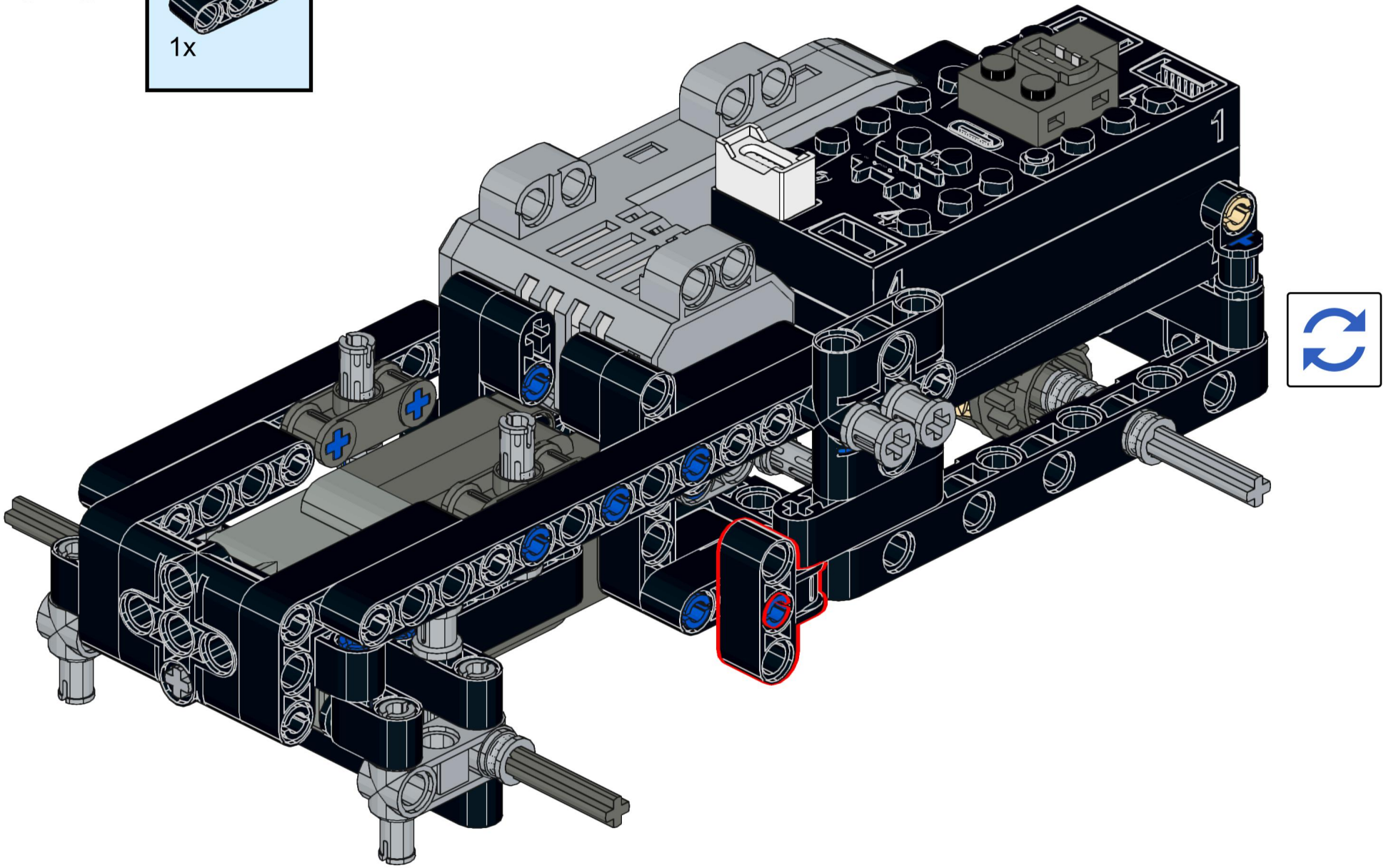

60

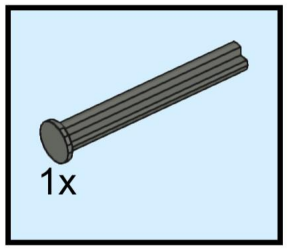

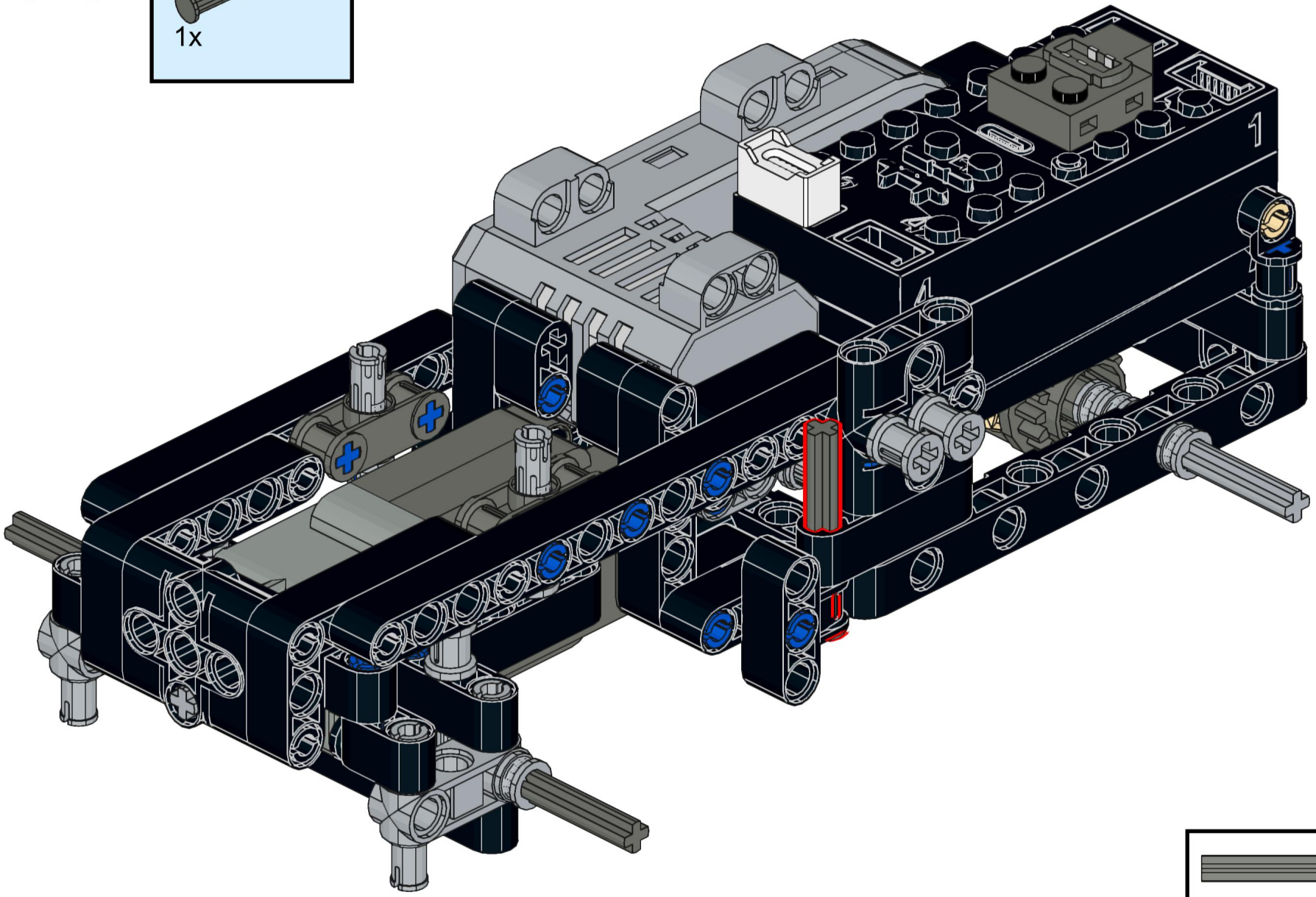

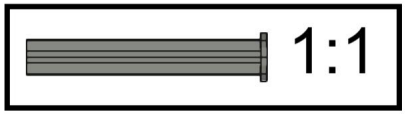

61

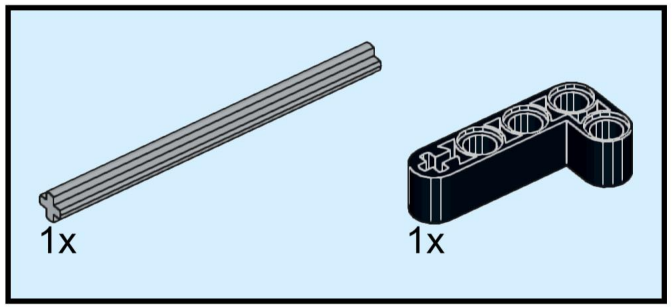

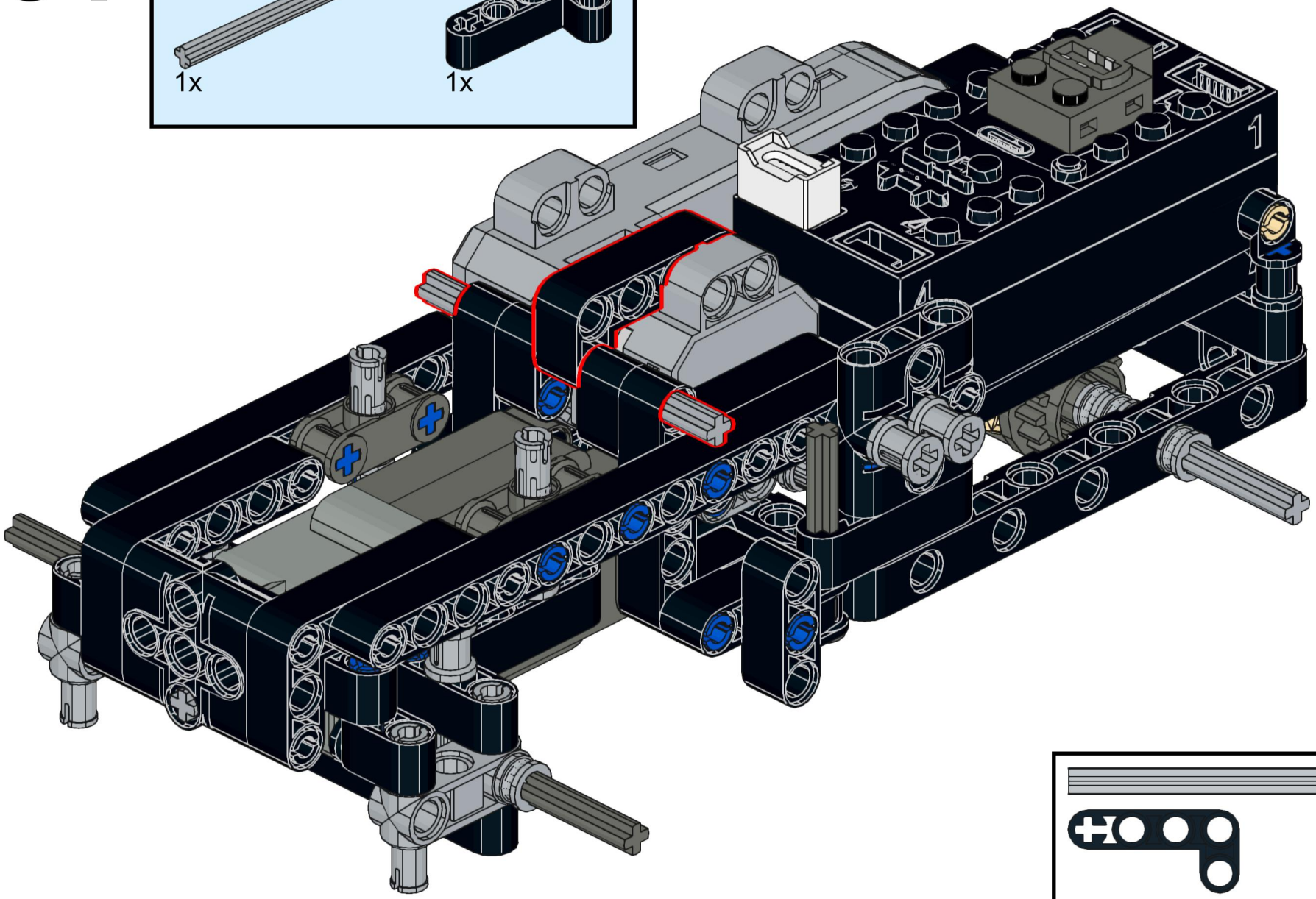

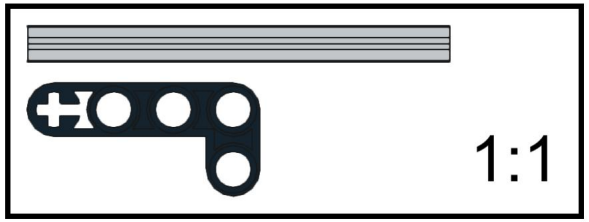

62

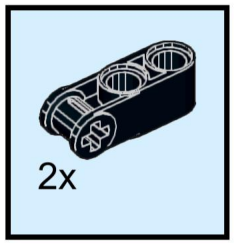

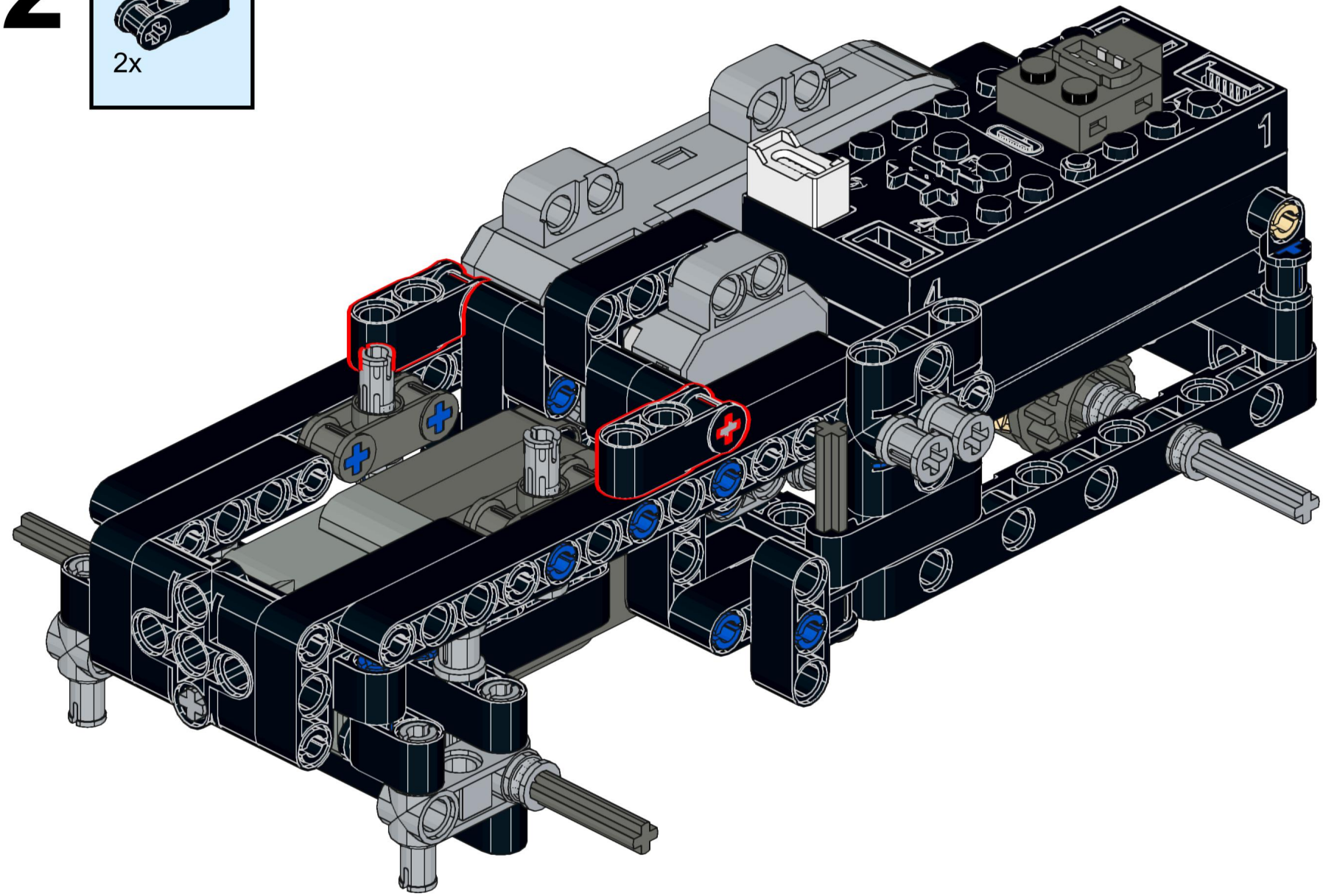

63

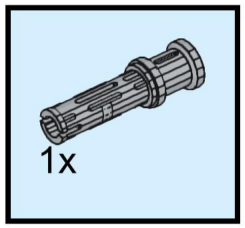

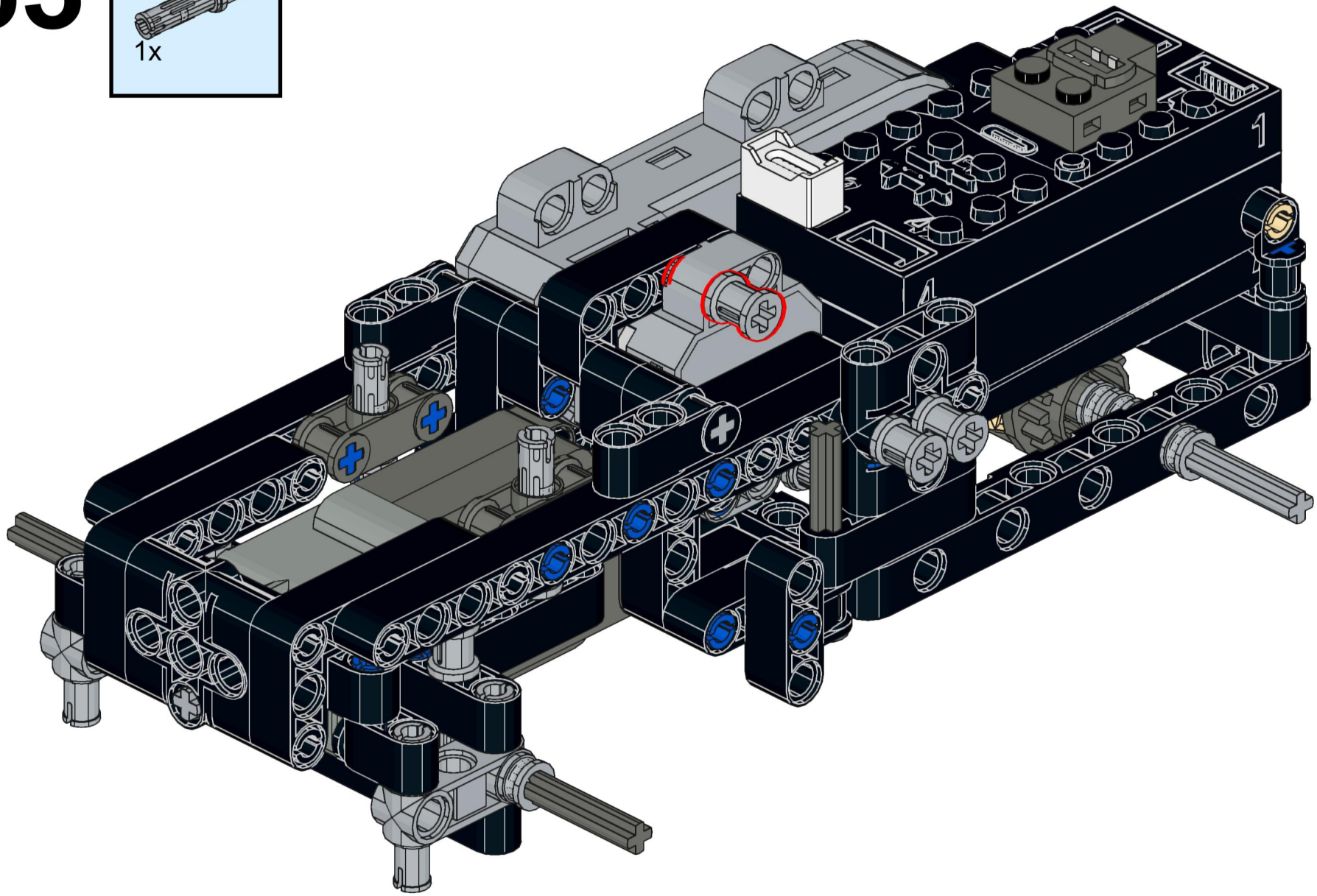

64

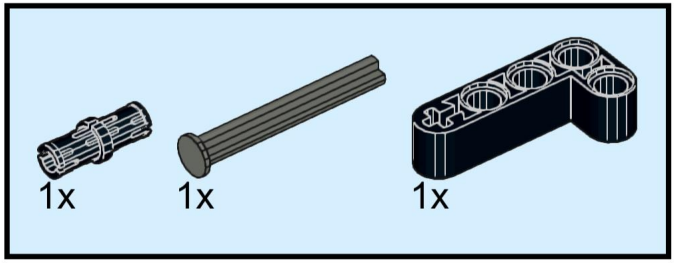

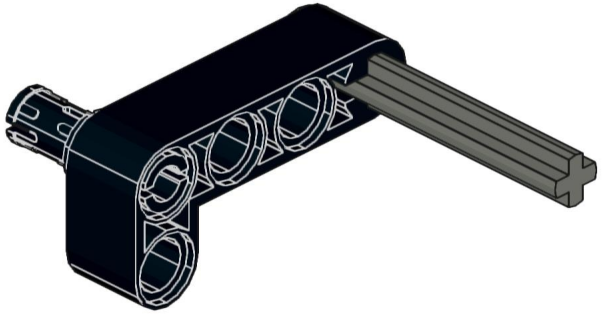

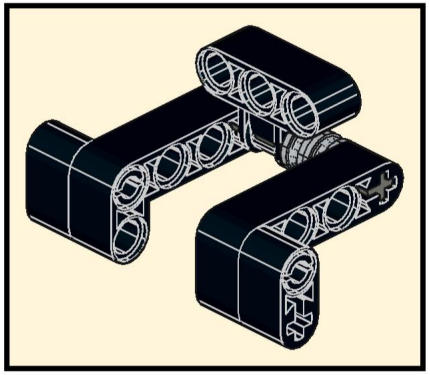

65

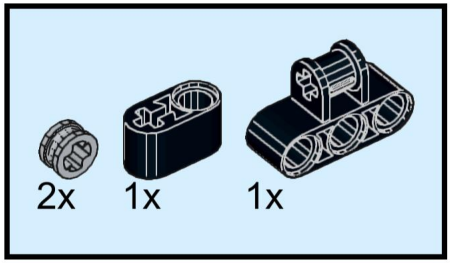

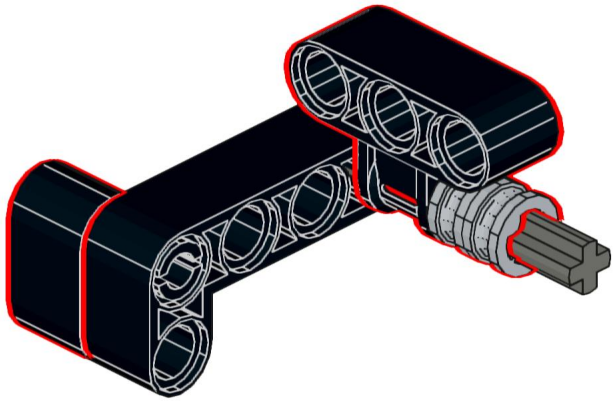

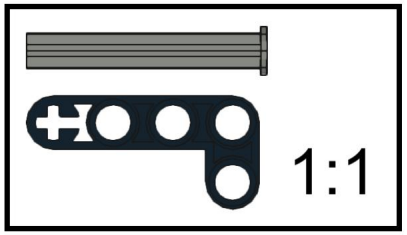

66

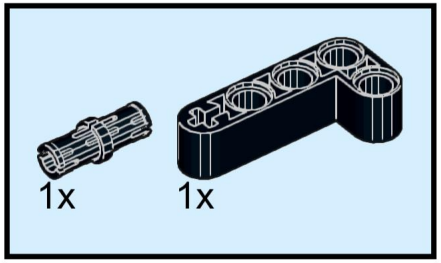

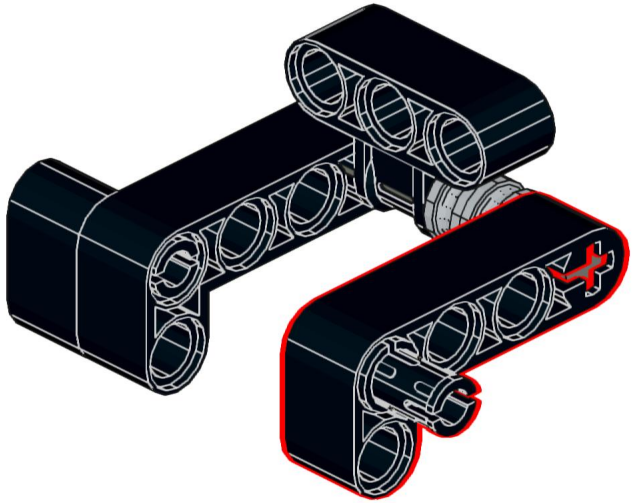

67

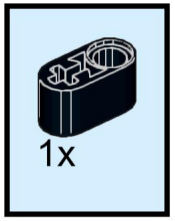

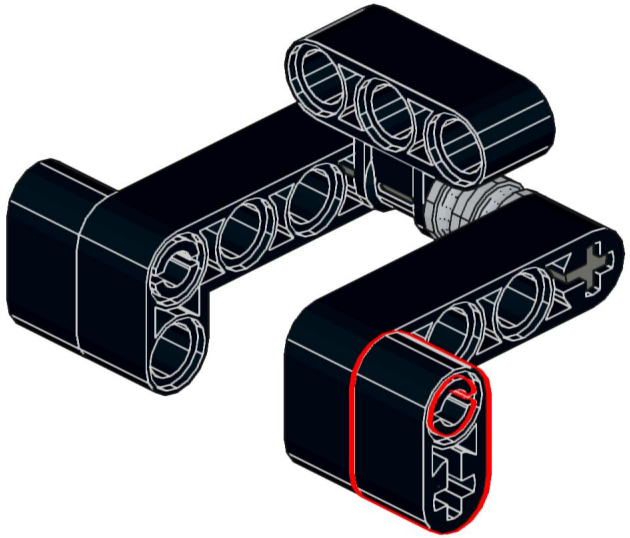

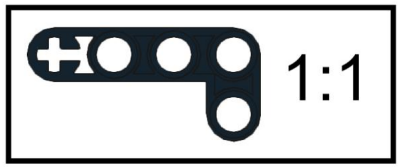

68

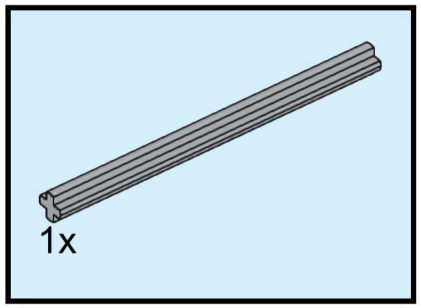

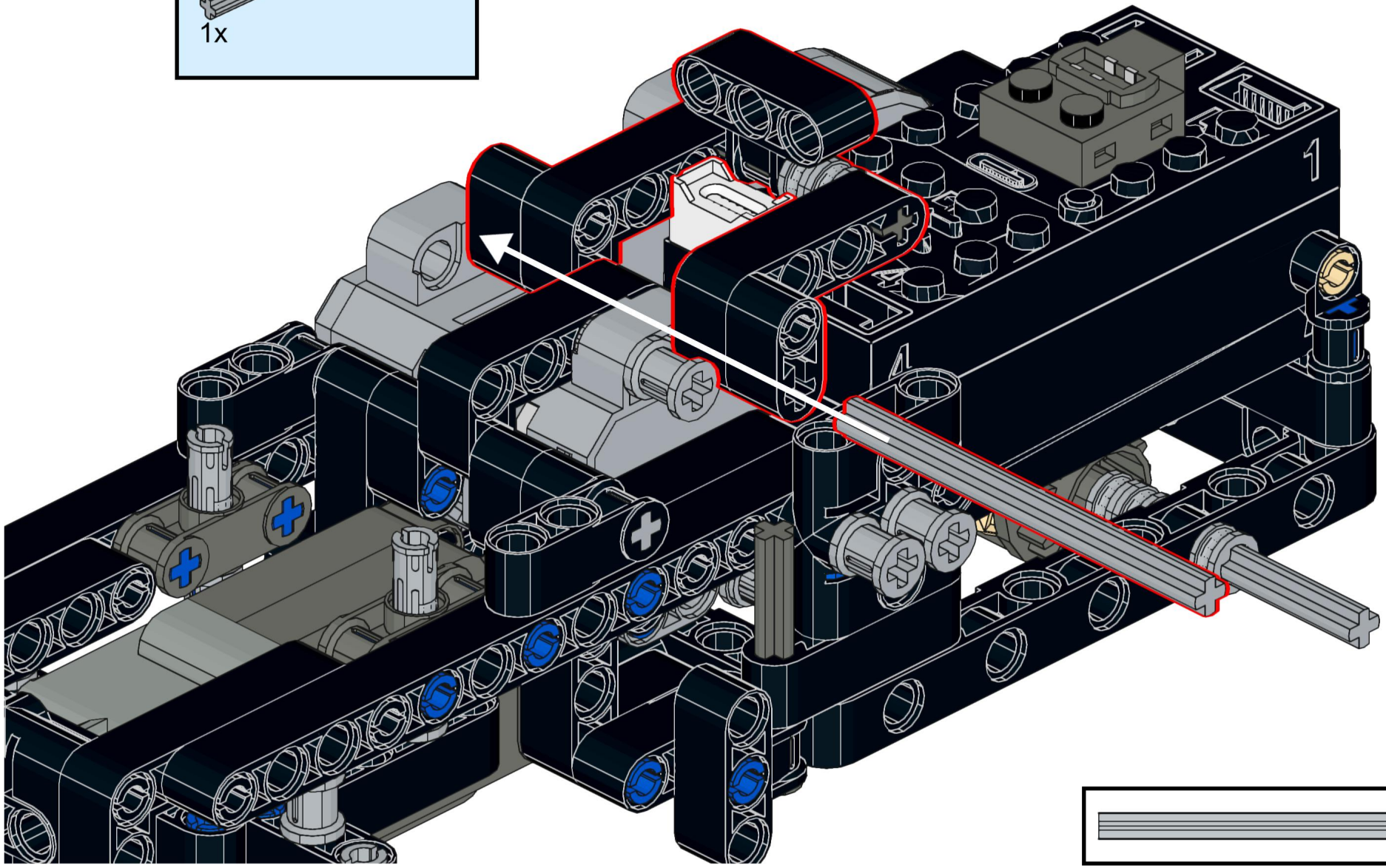

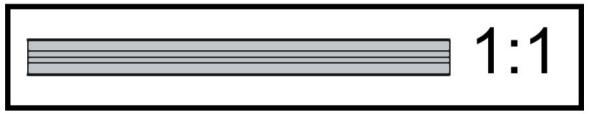

69

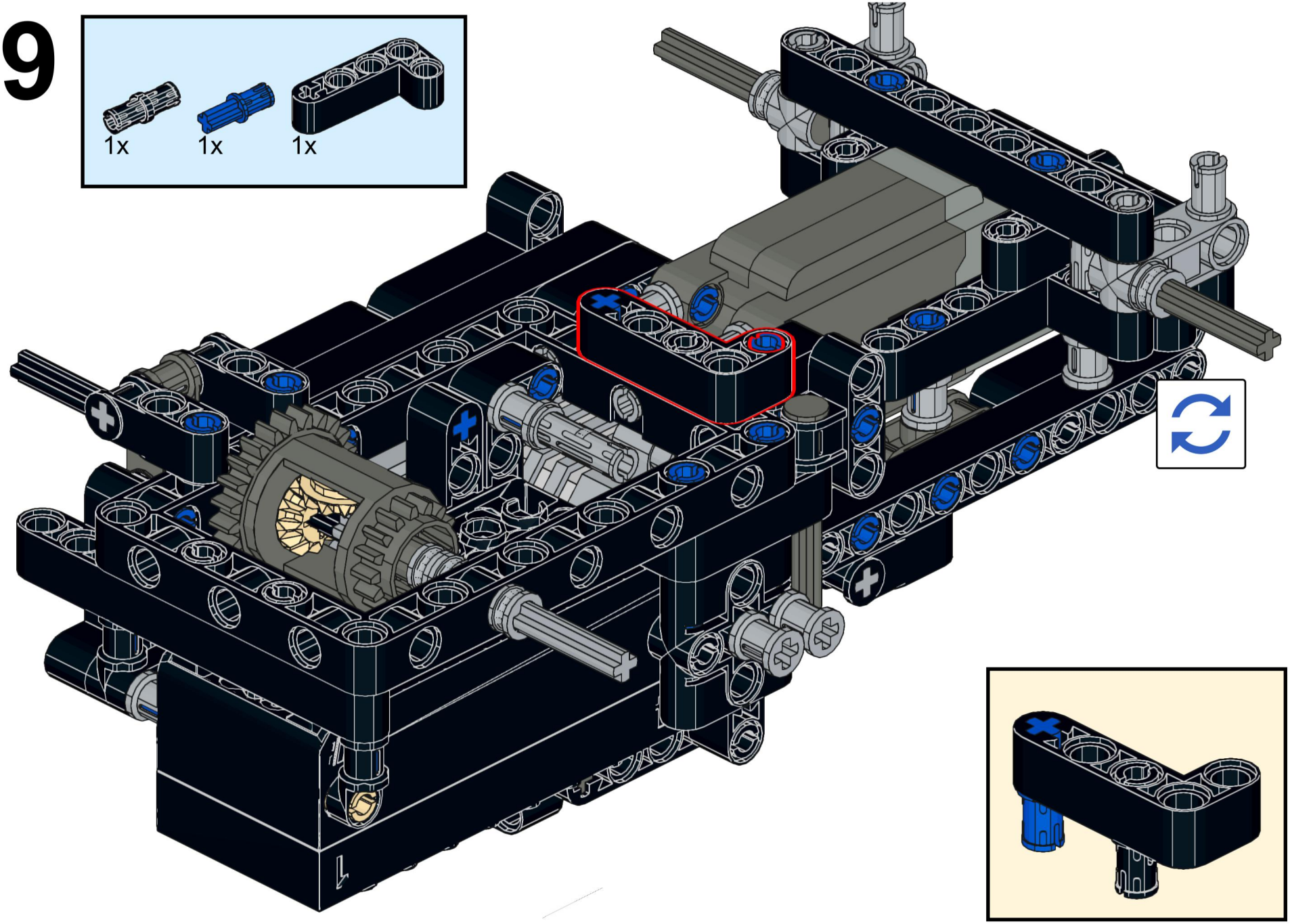

70

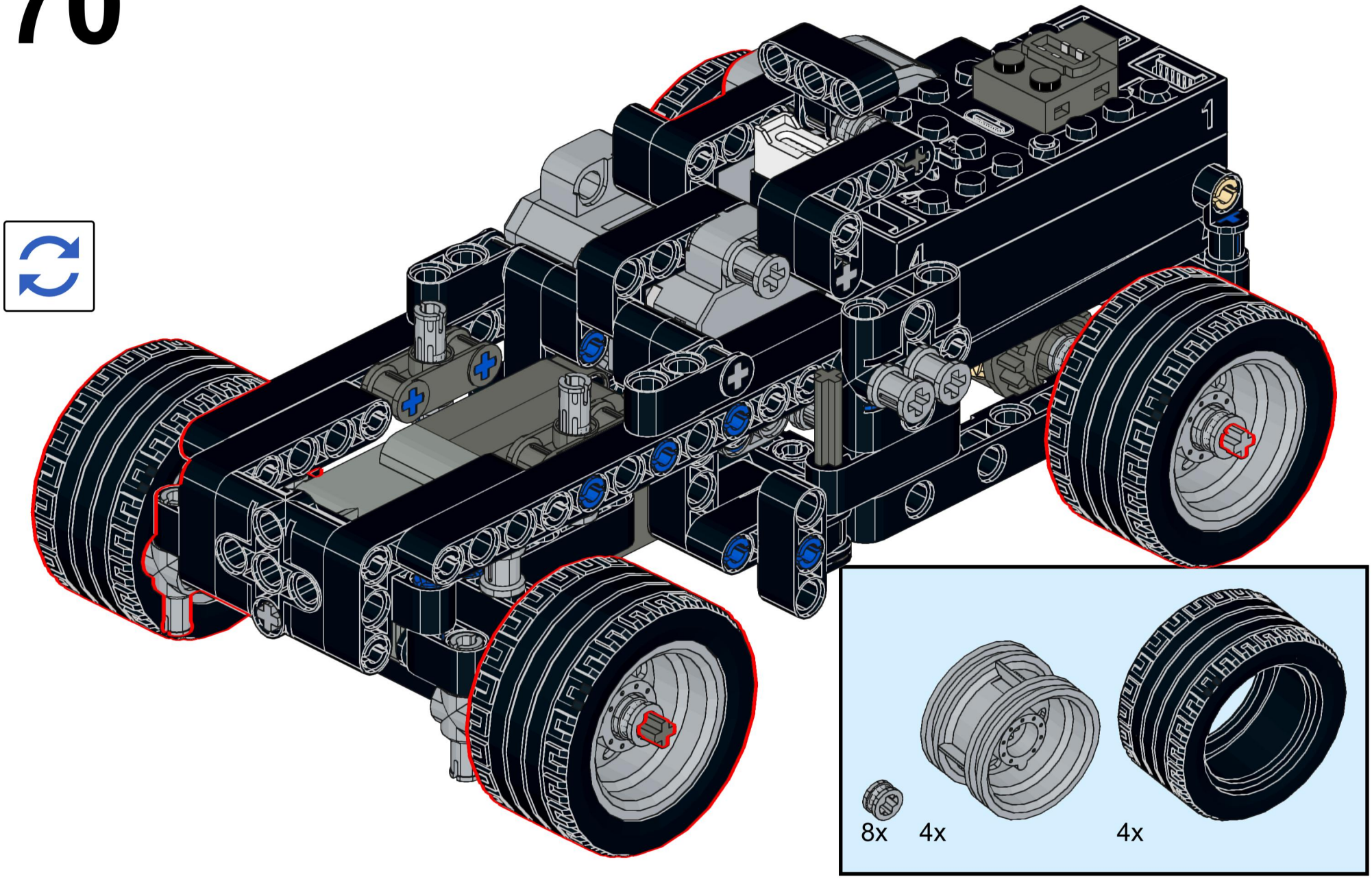

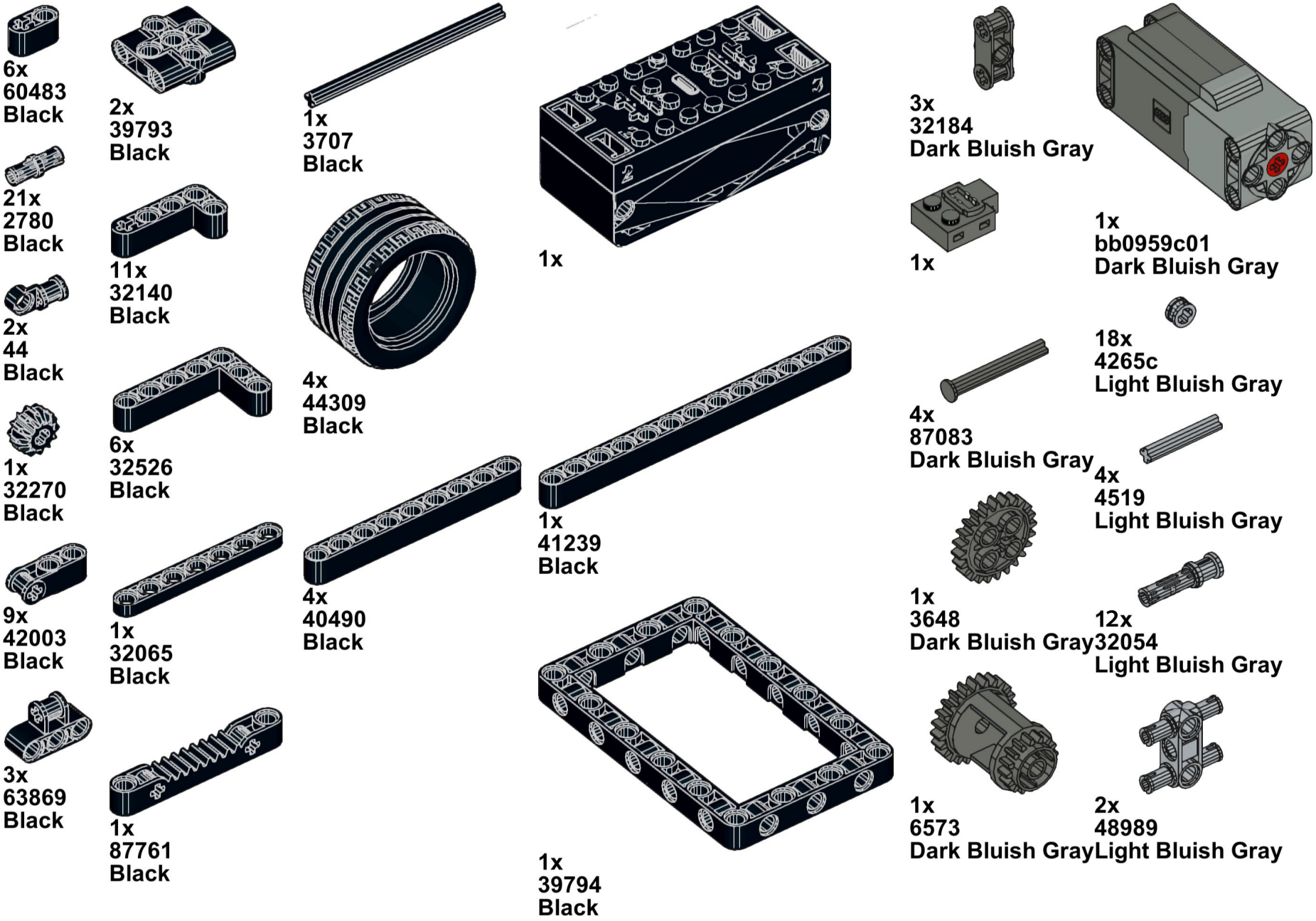
6x
60483
Black
21x
2780
Black
2x
44
Black
1x
32270
Black
9x
42003
Black
3x
63869
Black
2x
39793
Black
11x
32140
Black
6x
32526
Black
1x
32065
Black
1x
87761
Black
1x
3707
Black
4x
44309
Black
4x
40490
Black
1x
1x
41239
Black
1x
39794
Black
3x
32184
Dark Bluish Gray
1x
4x
87083
Dark Bluish Gray
1x
3648
Dark Bluish Gray
1x
6573
Dark Bluish Gray
1x
bb0959c01
Dark Bluish Gray
18x
4265c
Light Bluish Gray
4x
4519
Light Bluish Gray
12x
32054
Light Bluish Gray
2x
48989
Light Bluish Gray

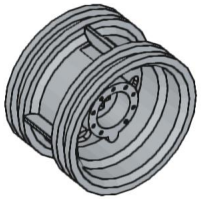

4x
56145
Light Bluish Gray

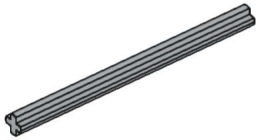

3x
44294
Light Bluish Gray

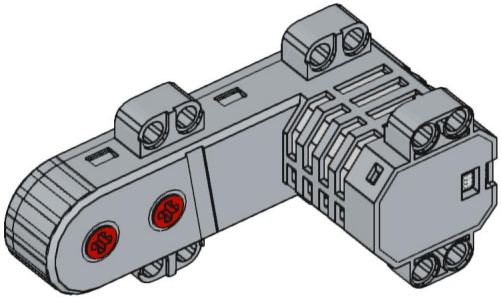

1x

2x
32002
Tan

3x
6589
Tan

21x
43093
Blue

15x
6558
Blue

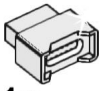

1x
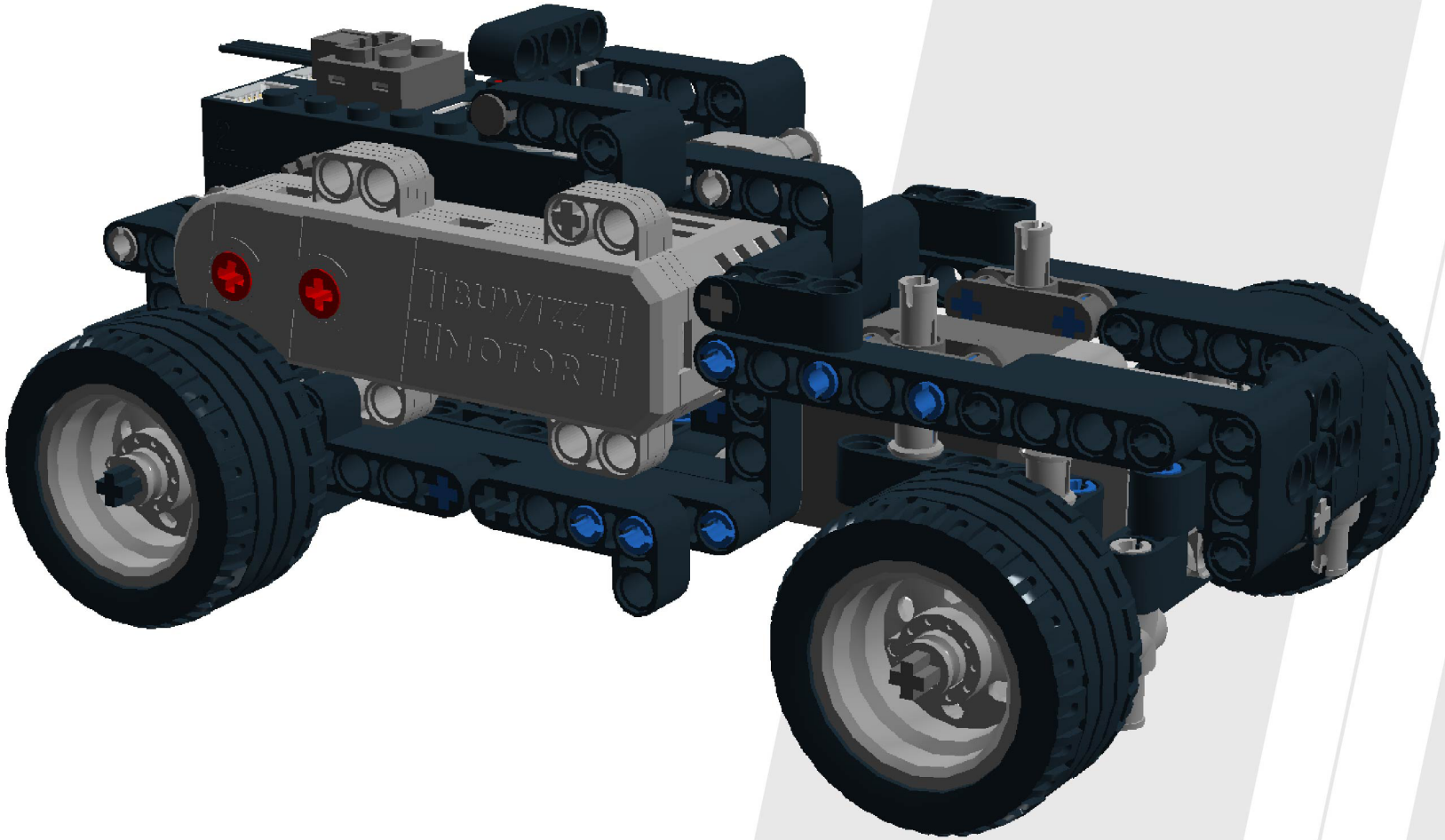
BuWizz